SUZUKI

Way of Life!

2017 GENUINE RIGGING-PARTS AND ACCESSORIES

Internal use only

...one that provides boaters with the utmost

THE ULTIMATE 4-STROKE OUTBOARD

* Always wear a lifejacket when boating and a kill cord when operating an outboard.

in excitement and satisfaction.

We, Suzuki, have spent an enormous amount of time on the water comparing, developing, and testing outboards, and just plain enjoying boating. So long ago we concluded that the ultimate outboard is one that gives the user a sense of excitement and satisfaction.
To that end, we focus our time, energy, knowledge, skills, and the most advanced technologies at our disposal, exploring and developing technologies and designs that give our outboards a superior edge, whether it be in the form of improved performance, greater durability, higher fuel efficiency, or quieter operation.
We will continue our challanges towards new technological innovations and higher target so that we can provide you with the ultimate experience on the water.

Dear Suzuki Dealer,

Quality. Dependability. Innovation. Everything that you expect from your outboard motors is delivered with style by SUZUKI.

Expect no less from the products that you choose to enhance your total boating pleasure. Ask for SUZUKI GENUINE ACCESSORIES.

This catalogue represents our commitment to provide you with the finest products available.

From our classic line of matching instruments and gauges to our custom-engineered propellers and rigging items, you can depend on SUZUKI GENUINE ACCESSORIES for optimum performance.

Take a few minutes to browse through this catalogue, and then be sure to contact your AUTHORIZED SUZUKI DISTRIBUTOR for further information.

Thank you.

TEAM SUZUKI MARINE

MODEL NAME AND ENGINE NUMBER

NOTE: Items and their part numbers showing in this catalogue are basically applicable to models of following engine numbers. Please consult your local dealers regarding other models and their rigging-parts and accessories.

model	engine number
DF300AP	30002P-710001~
DF250AP	25003P-710001~
DF250T	25003F-710001~
DF250Z	25003Z-710001~
DF225T	22503F-710001~
DF225Z	22503Z-710001~
DF200T	20002F-710001~
DF200Z	20002Z-710001~

model	engine number
DF200AP	20003P-710001~
DF200AT	20003F-710001~
DF200AZ	20003Z-710001~
DF175AP	17503P-710001~
DF175T	17502F-710001~
DF175Z	17502Z-710001~
DF150AP	15003P-710001~
DF150T	15002F-710001~

model	engine number
DF150Z	15002Z-710001~
DF140AT	14003F-710001~
DF140AZ	14003Z-710001~
DF115AT	11503F-710001~
DF115AZ	11503Z-710001~
DF100AT	10003F-710001~
DF90A	09003F-710001~
DF80A	08003F-710001~

model	engine number
DF70A	07003F-710001~
DF60A	06002F-710001~
DF60AV	06003F-710001~
DF50A	05003F-710001~
DF50AV	05004F-710001~
DF40A	04003F-710001~
DF30A	03003F-710001~
DF25A	02504F-710001~

model	engine number
DF15A	01504F-710001~
DF9.9B	00995F-710001~
DF9.9A	00994F-710001~
DF8A	00801F-710001~
DF6A	00603F-710001~
DF5A	00503F-710001~
DF4A	00403F-710001~
DF2.5	00252F-710001~

TABLE OF CONTENTS

ONE THAT PROVIDES BOATERS WITH THE UTMOST IN EXCITEMENT AND SATISFACTION	02
SUZUKI MULTI-FUNCTION GAUGE	06
COMPONENT OF SUZUKI MULTI-FUNCTION GAUGE	18
SUZUKI KEYLESS START SYSTEM	20
ANALOGUE INSTRUMENT	24
ELECTRONIC THROTTLE AND SHIFT SYSTEM	26
COMPONENT OF SUZUKI PRECISION CONTROL	34
MECHANICAL REMOTE CONTROL SYSTEM	36
COMPONENT OF MECHANICAL REMOTE CONTROL SYSTEM	40
STEERING	42
ELECTRICAL PARTS	44
FUEL SYSTEM	46
PROPELLER	48
ANODE	52
CARE & MAINTENANCE ITEM	53
SUZUKI MAINTENANCE KITS	56
APPLICATION CHART	58
MERCHANDISE	60
RECOMMENDED STEERING SYSTEM	66

REFERENCE

Part Number	15-digit alpha-numerical number shows Part Number to be used for ordering.
Gauge Size	Shows the size (2" or 4") of the gauge.
Background	Shows a main color of display panel on the front of a gauge.
Applicable Model	Shows typical or recommended models of ENGINES that RIGGING-PARTS and ACCESSORIES can be installed to.
Maximum Speed	Shows maximum speed that SPEEDOMETER displays.
kph	Kilometers Per Hour
mph	Miles Per Hour
knots	Knots

SUZUKI MULTI-FUNCTION GAUGE

34011-96L11-000
GAUGE ASSY, MULTI

MAIN FEATURES

HIGH PERFORMANCE

- Multi-Function Gauge displays a wide variety of information such as engine rpm, speed, trim angle, as well as diagnostics based on digital data received from the outboard motor.
- Gauges offer great reliability utilizing Suzuki's original warning system to provide the operator with accurate warning information.
- NMEA2000® terminal offers compatibility with a wide range of marine equipment by other manufacturers.[1]

SUPERIOR VISIBILITY

- Suzuki's next generation standard equipment gauge offers easy to use multi-function operation with superior readability.
- Easy to see, easy to read, easy to understand display offers a variety of modes including day and night modes and digital or analogue readouts.

COMPACT

- Compact, highly versatile gauge requires a 85 mm hole for mounting, making them the perfect replacement for 4-inch analogue gauges.[2]

[1] NMEA2000® is an NMEA (National Marine Electronics Association) standard communication protocol used for exchanging data between marine control units.
[2] 4-inch gauges that require 85mm mounting holes (as researched by Suzuki).

Tips
Multi-Function gauge can be

- Used for multiple engines
- Used for single engine
- Used in multiple gauge for single engine

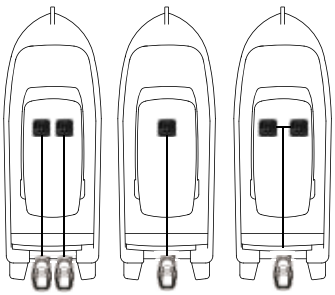

- How are you going to use it?

DISPLAY VARIATIONS

Analogue Tacho & Speed Mode

Analogue Speed Mode (Night)

Analogue Tacho Mode

Digital Tacho & Speed Mode

Digital Tacho Mode (Night)

Fuel Mode

INFORMATION

ANALOGUE TACHO & SPEED MODE

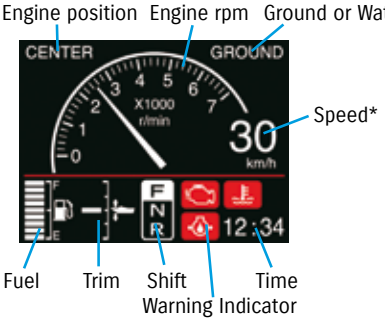

* Speed sensor or GPS module will be required in order to display the speed.

TACHO MODE

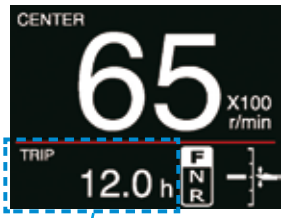

- Fuel flow [l/h, gph] (instantaneous)
- Mileage [km/l, mpg] (instantaneous and average)
- Trip time [h], trip distance [km, M, NM]
- Engine hour, Voltage, Water temp and more ...

SPECIFICATIONS

- 3.5" Color display
- Size: 105 mm (W) × 105 mm (H) × 16 mm (D)
- Diagnostic display
- Easy installation and setup
  Ø 85 mm hole & large resin nut
- Includes protective cover
- NMEA2000 output
- Applicable models: DF9.9B-DF300AP

Protective cover
(34211-96L00-000)

- Design and specifications may change without notice due to improvements in performance and function.

SUZUKI MULTI-FUNCTION GAUGE for MECHANICAL SINGLE

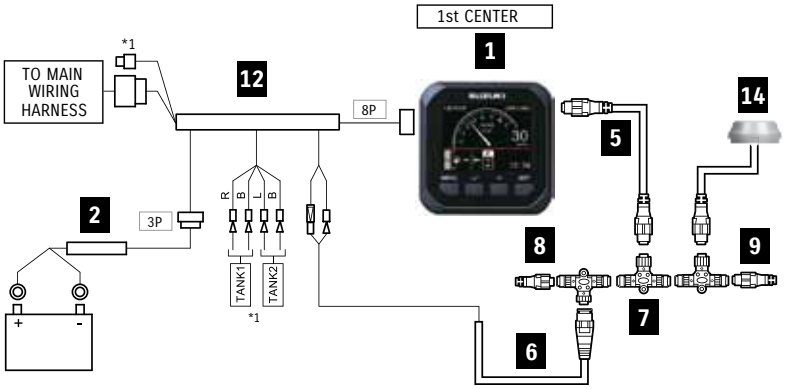

*1 When use additional fuel sender. Connect one by one and set up the fuel senders.

- Basic Kit
  34000-96L41-000 **A. GAUGE KIT**
- When using GPS module (or water speed)
  34000-96L41-000 **A. GAUGE KIT**
  + 36001-88L00-000 **B. CABLE KIT**
  + 990C0-88122-000 GPS Receiver Module
  990C0-88117-000 when using Water Speed)

+

- When using DF9.9B-DF30A
  36660-89L01-000

Basic Component

1 GAUGE ASSY, MULTI

2 WIRE COMP, GAUGE POWER

5 WIRE COMP, EXTENSION

6 HARNESS ASSY, NETWORK POWER

7 CONNECTOR COMP, BRANCH

8 UNIT COMP, RESISTOR FEMALE

9 UNIT COMP, RESISTOR MALE

12 ADAPTER COMP, GAUGE

14A SENSOR ASSY, PADDLE WHEEL

14B GPS RECEIVER MODULE

	SUZUKI MULTI-FUNCTION GAUGE for MECHANICAL SINGLE			KIT		Total Required Quantity
				A. GAUGE KIT	B. CABLE KIT	
	PART NUMBER	PART NAME	LENGTH	34000-96L41-000	36001-88L00-000	A (+ B) <+ 18 >
1	34011-96L11-000	GAUGE ASSY, MULTI	-	1	-	1
2	36663-98J00-000	WIRE COMP, GAUGE POWER	2.5 m	-	-	1
	36663-98J10-000		6.0 m	1	-	
5	990C0-88104-000	WIRE COMP, EXTENSION	0.6 m	-	1	(1)
	990C0-88105-000		1.8 m	-	-	
6	990C0-88112-000	HARNESS ASSY, NETWORK POWER	-	-	1	(1)
7	990C0-88110-000	CONNECTOR COMP, BRANCH	-	-	1	(1)
8	990C0-88113-000	UNIT COMP, RESISTOR FEMALE	-	-	1	(1)
9	990C0-88114-000	UNIT COMP, RESISTOR MALE	-	-	1	(1)
12	36661-96L10-000	ADAPTER COMP, GAUGE	-	1	-	1
14A	990C0-88117-000	SENSOR ASSY, PADDLE WHEEL	-	-	-	(1)
14B	990C0-88122-000	GPS RECEIVER MODULE	-	-	-	(1)
18	36660-89L01-000	SMFG, ADAPTER	-	-	-	<1>

( ) parts are required when using GPS module or water speed.
< > part is required when using with DF9.9B to 30A.

SUZUKI MULTI-FUNCTION GAUGE for MECHANICAL DUAL

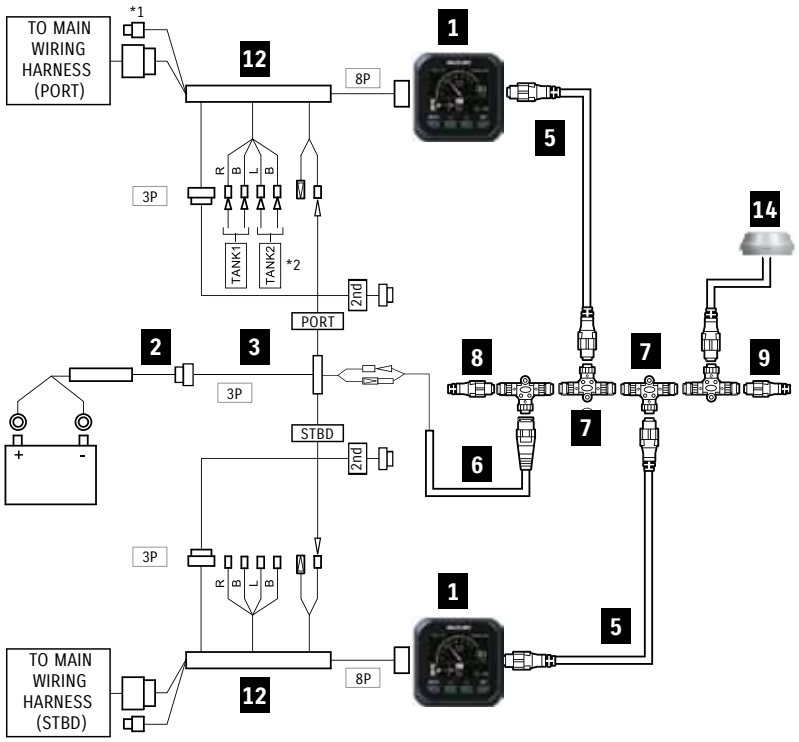

- Basic Kit
  34000-96L51-000 **A. GAUGE KIT**
- When using GPS module
  34000-96L51-000 **A. GAUGE KIT**
  + 990C0-88122-000 GPS Receiver Module
  (990C0-88117-000 when using Water Speed)

Basic Component

In addition to component of [MECHANICAL SINGLE]

3 ADAPTER, GAUGE FOR MULTI

SUZUKI MULTI-FUNCTION GAUGE for MECHANICAL DUAL			KIT	Total Required Quantity
			A. GAUGE KIT	
	PART NUMBER	PART NAME	LENGTH	34000-96L51-000	A (+14)
1	34011-96L11-000	GAUGE ASSY, MULTI	-	2	2
2	36663-98J00-000	WIRE COMP, GAUGE POWER	2.5 m	-	1
	36663-98J10-000		6.0 m	1	
3	36665-87L00-000	ADAPTER, GAUGE FOR MULTI	-	1	1
5	990C0-88104-000	WIRE COMP, EXTENSION	0.6 m	2	2
	990C0-88105-000		1.8 m	-	
6	990C0-88112-000	HARNESS ASSY, NETWORK POWER	-	1	1
7	990C0-88110-000	CONNECTOR COMP, BRANCH	-	2	2
8	990C0-88113-000	UNIT COMP, RESISTOR FEMALE	-	1	1
9	990C0-88114-000	UNIT COMP, RESISTOR MALE	-	1	1
12	36661-96L10-000	ADAPTER COMP, GAUGE	-	2	2
14A	990C0-88117-000	SENSOR ASSY, PADDLE WHEEL	-	-	(1)
14B	990C0-88122-000	GPS RECEIVER MODULE	-	-	(1)

( ) parts are required when using GPS module or water speed.

ADDITIONAL GAUGE COMPONENTS				Total Required
	PART NUMBER	PART NAME	LENGTH	
1	34011-96L11-000	GAUGE ASSY, MULTI	-	1
5	990C0-88104-000	WIRE COMP, EXTENSION	0.6 m	1
	990C0-88105-000		1.8 m	
7	990C0-88110-000	CONNECTOR COMP, BRANCH	-	1
15	36667-96L11-000	WIRE COMP, DUAL GAUGE ADAPTER	-	1
17	36667-96L20-000	WIRE, GAUGE EXT	-	-

Please use “36667-96L20-000 WIRE, GAUGE EXT” as an extension between “34011-96L11-000” and “36667-96L11-000”

SUZUKI MULTI-FUNCTION GAUGE for SUZUKI PRECISION CONTROL SINGLE

SINGLE STATION

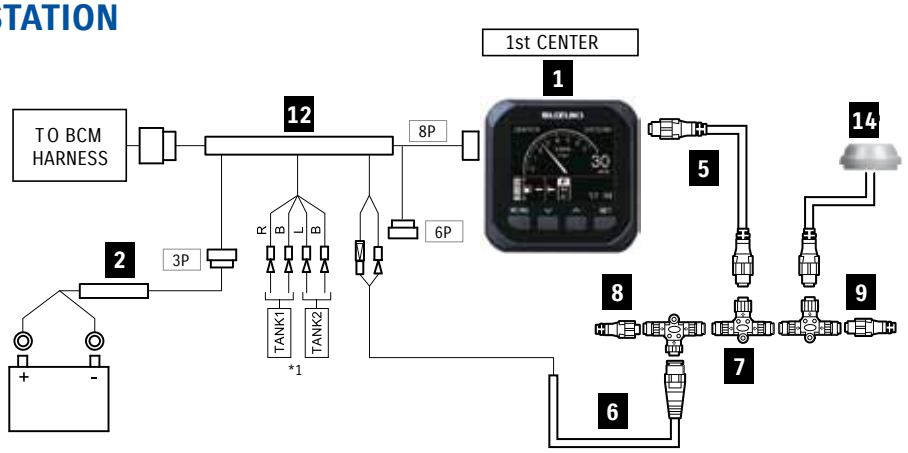

DUAL STATION

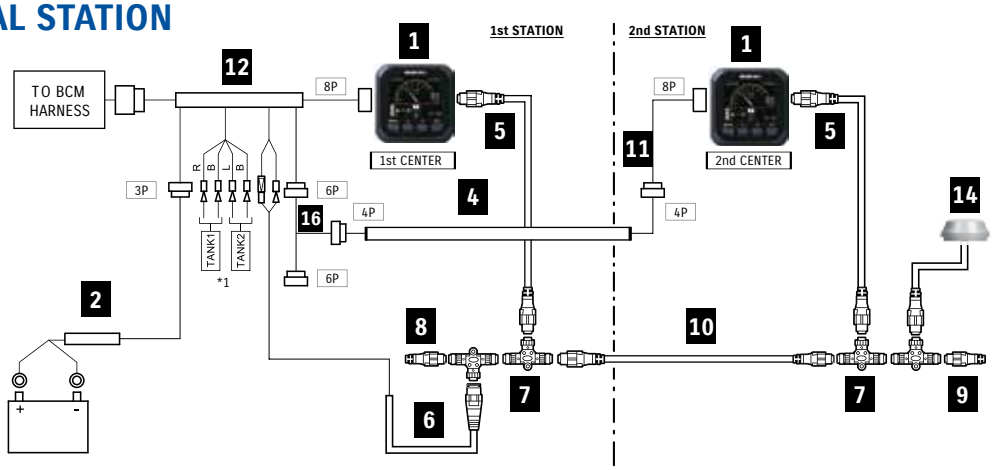

In addition to component of [SINGLE STATION]

4 WIRE COMP, GAUGE EXT

*1 When use additional fuel sender. Connect one by one and set up the fuel senders.

TOTAL REQUIREMENT LIST

SUZUKI MULTI-FUNCTION GAUGE for SUZUKI PRECISION CONTROL (S.P.C) SINGLE		Total Required Quantity					
PART NUMBER	PART NAME	SINGLE STATION	SINGLE STATION (Using Water Speed)	SINGLE STATION (Using GPS module)	DUAL STATION	DUAL STATION (Using Water Speed)	DUAL STATION (Using GPS module)
34000-96L61-000	GAUGE KIT	1	1	1	1	1	1
36001-88L00-000	CABLE KIT	-	1	1	1	1	1
34002-96L11-000	DUAL STATION KIT	-	-	-	1	1	1
10 990C0-88107-000 990C0-88108-000	WIRE COMP, EXTENSION	-	-	-	1	1	1
14A 990C0-88117-000	SENSOR ASSY, PADDLE WHEEL	-	1	-	-	1	-
14B 990C0-88122-000	GPS RECEIVER MODULE	-	-	1		-	1

COMPONENT LIST

KIT COMPONENT				KIT		
				GAUGE KIT	CABLE KIT	DUAL STATION KIT
	PART NUMBER	PART NAME	LENGTH	34000-96L61-000	36001-88L00-000	34002-96L11-000
1	34011-96L11-000	GAUGE ASSY, MULTI	-	1	-	1
2	36663-98J10-000	WIRE COMP, GAUGE POWER	6.0 m	1	-	-
4	36682-92E00-000	WIRE COMP, GAUGE EXT	6.4 m	-	-	1
5	990C0-88104-000	WIRE COMP, EXTENSION	0.6 m	-	1	1
6	990C0-88112-000	HARNESS ASSY, NETWORK POWER	-	-	1	-
7	990C0-88110-000	CONNECTOR COMP, BRANCH	-	-	1	1
8	990C0-88113-000	UNIT COMP, RESISTOR FEMALE	-	-	1	-
9	990C0-88114-000	UNIT COMP, RESISTOR MALE	-	-	1	-
11	36666-96L00-000	ADAPTER, GAUGE POWER	-	-	-	1
12	36661-96L00-000	ADAPTER COMP, GAUGE	-	1	-	-
16	36665-96L00-000	ADAPTER COMP, DUAL STATION	-	-	-	1

Optional Component list

2	36663-98J00-000	WIRE COMP, GAUGE POWER	2.5 m
5	990C0-88105-000	WIRE COMP, EXTENSION	1.8 m
10	990C0-88107-000	WIRE COMP, EXTENSION	4.6 m
	990C0-88108-000	WIRE COMP, EXTENSION	7.6 m
14A	990C0-88117-000	SENSOR ASSY, PADDLE WHEEL	
14B	990C0-88122-000	GPS RECEIVER MODULE	

Component Parts

1 GAUGE ASSY, MULTI

2 WIRE COMP, GAUGE POWER

5 WIRE COMP, EXTENSION

6 HARNESS ASSY, NETWORK POWER

7 CONNECTOR COMP, BRANCH

8 UNIT COMP, RESISTOR FEMALE

9 UNIT COMP, RESISTOR MALE

12 ADAPTER COMP, GAUGE

14A SENSOR ASSY, PADDLE WHEEL

14B GPS RECEIVER MODULE

SUZUKI MULTI-FUNCTION GAUGE for SUZUKI PRECISION CONTROL DUAL

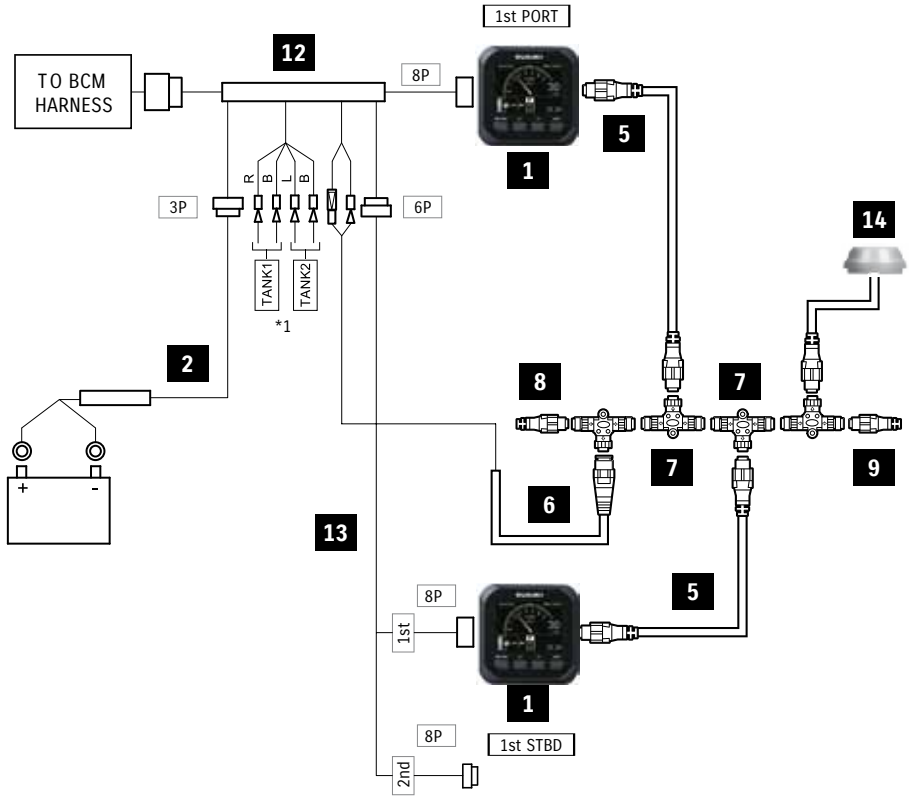

*1 When use additional fuel sender. Connect one by one and set up the fuel senders.

TOTAL REQUIREMENT LIST

SUZUKI MULTI-FUNCTION GAUGE for SUZUKI PRECISION CONTROL (S.P.C) DUAL			Total Required Quantity					
	PART NUMBER	PART NAME	SINGLE STATION	SINGLE STATION (Using Water Speed)	SINGLE STATION (Using GPS module)	DUAL STATION	DUAL STATION (Using Water Speed)	DUAL STATION (Using GPS module)
	34000-96L71-000	**GAUGE KIT**	**1**	**1**	**1**	**1**	**1**	**1**
	34002-96L11-000	**DUAL STATION KIT**	-	-	-	**1**	**1**	**1**
1	34011-96L11-000	GAUGE ASSY, MULTI	-	-	-	1	1	1
5	990C0-88104-000	WIRE COMP, EXTENSION	-	-	-	1	1	1
7	990C0-88110-000	CONNECTOR COMP, BRANCH	-	-	-	1	1	1
10	990C0-88107-000 990C0-88108-000	WIRE COMP, EXTENSION	-	-	-	1	1	1
14A	990C0-88117-000	SENSOR ASSY, PADDLE WHEEL	-	1	-	-	1	-
14B	990C0-88122-000	GPS RECEIVER MODULE	-	-	1		-	1
15	36667-96L11-000	WIRE COMP, GAUGE ADAPTER	-	-	-	1	1	1
16	36665-96L00-000	ADAPTER COMP, DUAL STATION	-	-	-	1	1	1

COMPONENT LIST

KIT COMPONENT				KIT	
				GAUGE KIT	DUAL STATION KIT
	PART NUMBER	PART NAME	LENGTH	34000-96L71-000	34002-96L11-000
1	34011-96L11-000	GAUGE ASSY, MULTI	-	2	1
2	36663-98J10-000	WIRE COMP, GAUGE POWER	6.0 m	1	-
4	36682-92E00-000	WIRE COMP, GAUGE EXT	6.4 m	-	1
5	990C0-88104-000	WIRE COMP, EXTENSION	0.6 m	2	1
6	990C0-88112-000	HARNESS ASSY, NETWORK POWER	-	1	-
7	990C0-88110-000	CONNECTOR COMP, BRANCH	-	2	1
8	990C0-88113-000	UNIT COMP, RESISTOR FEMALE	-	1	-
9	990C0-88114-000	UNIT COMP, RESISTOR MALE	-	1	-
11	36666-96L00-000	ADAPTER, GAUGE POWER	-	-	1
12	36661-96L00-000	ADAPTER COMP, GAUGE	-	1	-
13	36667-96L00-000	WIRE COMP, GAUGE ADAPTER	-	1	-
16	36665-96L00-000	ADAPTER COMP, DUAL STATION	-	-	1

Optional Component list

2	36663-98J00-000	WIRE COMP, GAUGE POWER	2.5 m
5	990C0-88105-000	WIRE COMP, EXTENSION	1.8 m
10	990C0-88107-000	WIRE COMP, EXTENSION	4.6 m
	990C0-88108-000	WIRE COMP, EXTENSION	7.6 m
14A	990C0-88117-000	SENSOR ASSY, PADDLE WHEEL	
14B	990C0-88122-000	GPS RECEIVER MODULE	
15	36667-96L11-000	WIRE COMP, GAUGE ADAPTER	

Component Parts

1 GAUGE ASSY, MULTI

2 WIRE COMP, GAUGE POWER

5 WIRE COMP, EXTENSION

6 HARNESS ASSY, NETWORK POWER

7 CONNECTOR COMP, BRANCH

8 UNIT COMP, RESISTOR FEMALE

9 UNIT COMP, RESISTOR MALE

12 ADAPTER COMP, GAUGE

14A SENSOR ASSY, PADDLE WHEEL

14B GPS RECEIVER MODULE

SUZUKI MULTI-FUNCTION GAUGE for SUZUKI PRECISION CONTROL TRIPLE

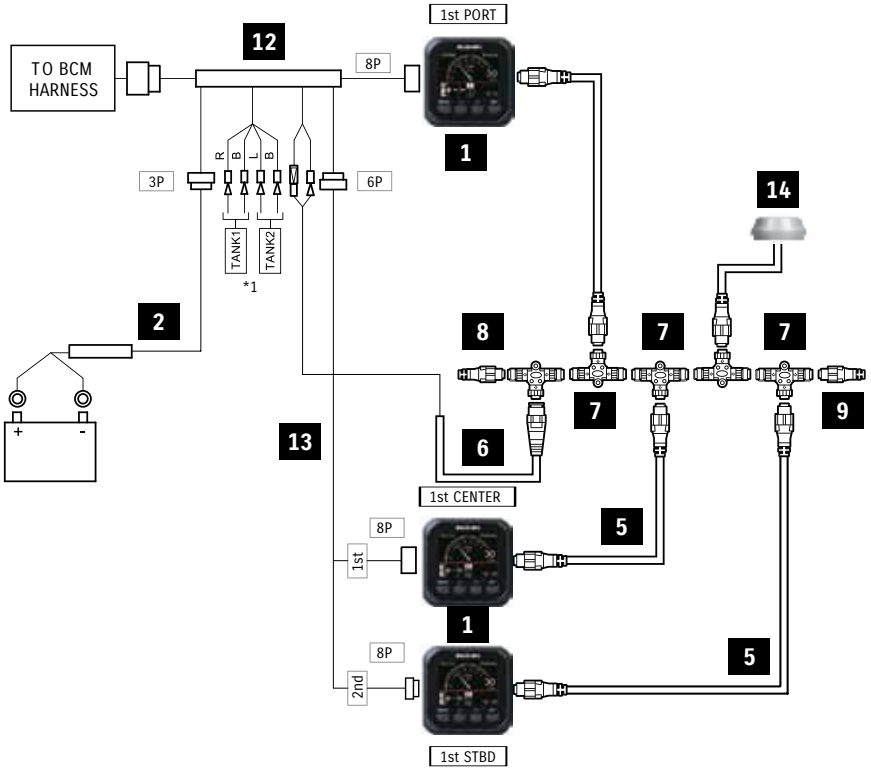

*1 When use additional fuel sender. Connect one by one and set up the fuel senders.

TOTAL REQUIREMENT LIST

SUZUKI MULTI-FUNCTION GAUGE for SUZUKI PRECISION CONTROL (S.P.C) TRIPLE			Total Required Quantity					
	PART NUMBER	PART NAME	SINGLE STATION	SINGLE STATION (Using Water Speed)	SINGLE STATION (Using GPS module)	DUAL STATION	DUAL STATION (Using Water Speed)	DUAL STATION (Using GPS module)
	34000-96L71-000	**GAUGE KIT**	**1**	**1**	**1**	**1**	**1**	**1**
	34002-96L11-000	**DUAL STATION KIT**	-	-	-	**1**	**1**	**1**
1	34011-96L11-000	GAUGE ASSY, MULTI	1	1	1	3	3	3
5	990C0-88104-000	WIRE COMP, EXTENSION	1	1	1	3	3	3
7	990C0-88110-000	CONNECTOR COMP, BRANCH	1	1	1	3	3	3
10	990C0-88107-000 990C0-88108-000	WIRE COMP, EXTENSION	-	-	-	1	1	1
14A	990C0-88117-000	SENSOR ASSY, PADDLE WHEEL	-	1	-	-	1	-
14B	990C0-88122-000	GPS RECEIVER MODULE	-	-	1		-	1
15	36667-96L11-000	WIRE COMP, GAUGE ADAPTER	-	-	-	2	2	2
16	36665-96L00-000	ADAPTER COMP, DUAL STATION	-	-	-	1	1	1

COMPONENT LIST

KIT COMPONENT				KIT	
				A. GAUGE KIT	B. DUAL STATION KIT
	PART NUMBER	PART NAME	LENGTH	34000-96L71-000	34002-96L11-000
1	34011-96L11-000	GAUGE ASSY, MULTI	-	2	1
2	36663-98J10-000	WIRE COMP, GAUGE POWER	6.0 m	1	-
4	36682-92E00-000	WIRE COMP, GAUGE EXT	6.4 m	-	1
5	990C0-88104-000	WIRE COMP, EXTENSION	0.6 m	2	1
6	990C0-88112-000	HARNESS ASSY, NETWORK POWER	-	1	-
7	990C0-88110-000	CONNECTOR COMP, BRANCH	-	2	1
8	990C0-88113-000	UNIT COMP, RESISTOR FEMALE	-	1	-
9	990C0-88114-000	UNIT COMP, RESISTOR MALE	-	1	-
11	36666-96L00-000	ADAPTER, GAUGE POWER	-	-	1
12	36661-96L00-000	ADAPTER COMP, GAUGE	-	1	-
13	36667-96L00-000	WIRE COMP, GAUGE ADAPTER	-	1	-
16	36665-96L00-000	ADAPTER COMP, DUAL STATION	-	-	1

Optional Component list

2	36663-98J00-000	WIRE COMP, GAUGE POWER	2.5 m
5	990C0-88105-000	WIRE COMP, EXTENSION	1.8 m
10	990C0-88107-000	WIRE COMP, EXTENSION	4.6 m
	990C0-88108-000	WIRE COMP, EXTENSION	7.6 m
14A	990C0-88117-000	SENSOR ASSY, PADDLE WHEEL	
14B	990C0-88122-000	GPS RECEIVER MODULE	
15	36667-96L11-000	WIRE COMP, GAUGE ADAPTER	

Component Parts

1 GAUGE ASSY, MULTI

2 WIRE COMP, GAUGE POWER

5 WIRE COMP, EXTENSION

6 HARNESS ASSY, NETWORK POWER

7 CONNECTOR COMP, BRANCH

8 UNIT COMP, RESISTOR FEMALE

9 UNIT COMP, RESISTOR MALE

12 ADAPTER COMP, GAUGE

14A SENSOR ASSY, PADDLE WHEEL

14B GPS RECEIVER MODULE

SUZUKI MULTI-FUNCTION GAUGE for SUZUKI PRECISION CONTROL QUADRAPLE

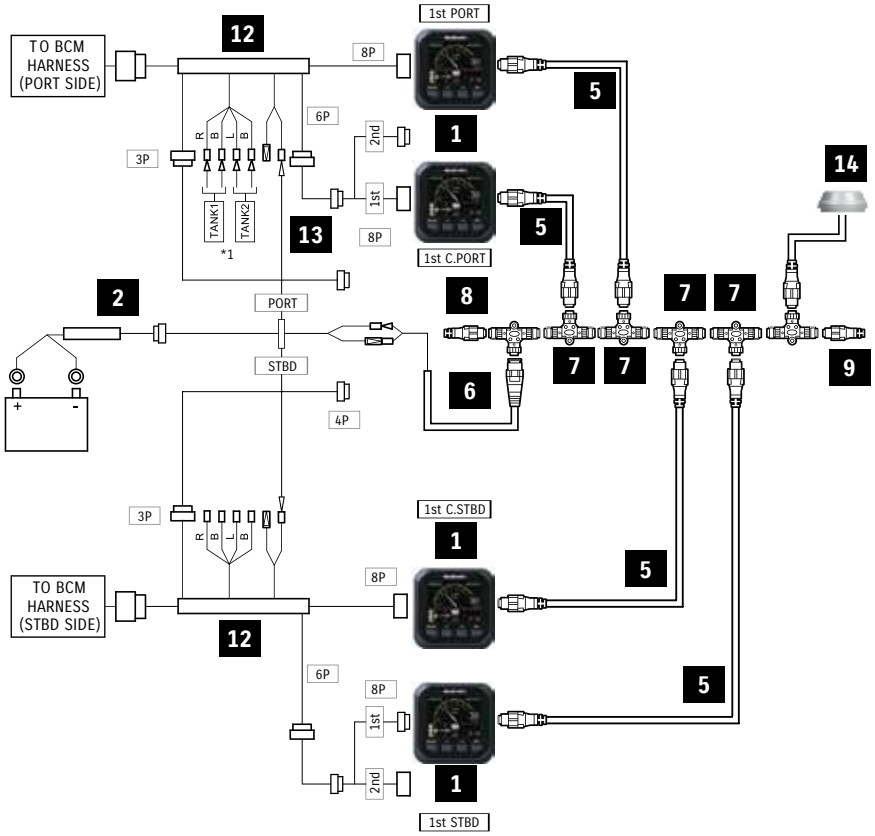

*1 When use additional fuel sender. Connect one by one and set up the fuel senders.

TOTAL REQUIREMENT LIST

SUZUKI MULTI-FUNCTION GAUGE for SUZUKI PRECISION CONTROL (S.P.C) QUADRAPLE		Total Required Quantity					
PART NUMBER	PART NAME	SINGLE STATION	SINGLE STATION (Using Water Speed)	SINGLE STATION (Using GPS module)	DUAL STATION	DUAL STATION (Using Water Speed)	DUAL STATION (Using GPS module)
34000-96L71-000	**GAUGE KIT**	**1**	**1**	**1**	**1**	**1**	**1**
34002-96L11-000	**DUAL STATION KIT**	-	-	-	**1**	**1**	**1**
1 34011-96L11-000	GAUGE ASSY, MULTI	2	2	2	5	5	5
3 36665-87L00-000	ADAPTER, GAUGE FOR MULTI	1	1	1	1	1	1
4 36682-92E00-000	WIRE COMP, GAUGE EXT				1	1	1
5 990C0-88104-000	WIRE COMP, EXTENSION	2	2	2	5	5	5
7 990C0-88110-000	CONNECTOR COMP, BRANCH	2	2	2	5	5	5
10 990C0-88107-000 990C0-88108-000	WIRE COMP, EXTENSION	-	-	-	1	1	1
12 36661-96L00-000	ADAPTER COMP, GAUGE	1	1	1	1	1	1
13 36667-96L00-000	WIRE COMP, GAUGE ADAPTER	1	1	1	1	1	1
14A 990C0-88117-000	SENSOR ASSY, PADDLE WHEEL	-	1	-	-	1	-
14B 990C0-88122-000	GPS RECEIVER MODULE	-	-	1		-	1
16 36665-96L00-000	ADAPTER COMP, DUAL STATION	-	-	-	1	1	1

COMPONENT LIST

KIT COMPONENT				KIT	
				GAUGE KIT	DUAL STATION KIT
	PART NUMBER	PART NAME	LENGTH	34000-96L71-000	34002-96L11-000
1	34011-96L11-000	GAUGE ASSY, MULTI	-	2	1
2	36663-98J10-000	WIRE COMP, GAUGE POWER	6.0 m	1	-
4	36682-92E00-000	WIRE COMP, GAUGE EXT	6.4 m	-	1
5	990C0-88104-000	WIRE COMP, EXTENSION	0.6 m	2	1
6	990C0-88112-000	HARNESS ASSY, NETWORK POWER	-	1	-
7	990C0-88110-000	CONNECTOR COMP, BRANCH	-	2	1
8	990C0-88113-000	UNIT COMP, RESISTOR FEMALE	-	1	-
9	990C0-88114-000	UNIT COMP, RESISTOR MALE	-	1	-
11	36666-96L00-000	ADAPTER, GAUGE POWER	-	-	1
12	36661-96L00-000	ADAPTER COMP, GAUGE	-	1	-
13	36667-96L00-000	WIRE COMP, GAUGE ADAPTER	-	1	-
16	36665-96L00-000	ADAPTER COMP, DUAL STATION	-	-	1

Optional Component list

2	36663-98J00-000	WIRE COMP, GAUGE POWER	2.5 m
3	36665-87L00-000	ADAPTER, GAUGE FOR MULTI	
5	990C0-88105-000	WIRE COMP, EXTENSION	1.8 m
10	990C0-88107-000	WIRE COMP, EXTENSION	4.6 m
	990C0-88108-000	WIRE COMP, EXTENSION	7.6 m
14A	990C0-88117-000	SENSOR ASSY, PADDLE WHEEL	
14B	990C0-88122-000	GPS RECEIVER MODULE	

Component Parts

1 GAUGE ASSY, MULTI

2 WIRE COMP, GAUGE POWER

5 WIRE COMP, EXTENSION

6 HARNESS ASSY, NETWORK POWER

7 CONNECTOR COMP, BRANCH

8 UNIT COMP, RESISTOR FEMALE

9 UNIT COMP, RESISTOR MALE

12 ADAPTER COMP, GAUGE

14A SENSOR ASSY, PADDLE WHEEL

14B GPS RECEIVER MODULE

COMPONENT OF SUZUKI MULTI-FUNCTION GAUGE

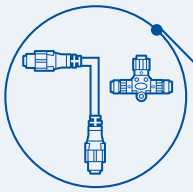

POWER CABLE

GAUGE ADAPTER

36661-96L10-000

36661-96L00-000

TRIM METER WIRE

36682-92E00-000

6.4 meters

36666-96L00-000

GAUGE POWER ADAPTER

GAUGE ADAPTER

36665-87L00-000

For using multiple SMFGs

36665-96L00-000

DUAL STATION ADAPTER

ACTIVE HUB POWER HARNESS

36663-98J00-000

2.5 meters

36663-98J10-000

6.0 meters

DUAL GAUGE ADAPTER WIRE

36667-96L00-000

GAUGE ADAPTER WIRE

36667-96L11-000

GAUGE EXTENSION WIRE

36667-96L20-000

CONNECTION HARDWARE

NMEA2000® compatible sensors or other devices can be added by the use of T-connectors throughout the system.

EXTENSION CABLE

990C0-88104-000

0.6 meters

990C0-88105-000

1.8 meters

990C0-88107-000

4.6 meters

990C0-88108-000

7.6 meters

POWER CABLE WITH T-CONNECTOR

990C0-88112-000

The fused (3A) lead connects the extension cable to the power source.

T-CONNECTOR

990C0-88110-000

T-connectors link all compatible cables, data and sensor devices, and can be easily secured.

TERMINATOR FEMALE

990C0-88113-000

120-ohm terminators are required for any open cable ends in the system.

TERMINATOR MALE

990C0-88114-000

T-connectors link all compatible cables, data and sensor devices, and can be easily secured.

SENSORS

SPEED SENSOR WITH T-CONNECTOR

990C0-88117-000

Paddle wheel-type speed sensor. 10 feet cable.

GPS RECEIVER MODULE WITH T-CONNECTOR

990C0-88122-000

Displays the accurate location and speed on Multi-Function Gauges.

ANALOGUE INSTRUMENT

Caution lamp	Caution type
CHECK ENGINE	Low battery-voltage or other cautions on S.D.S
TEMP	Overheat (Over-revolution)
OIL	Low oil-pressure (Over-revolution)
	Oil change reminder
REV LIMIT	Over-revolution

TACHOMETER

White

Black

34200-93J12-000 (White)

34200-93J00-000 (Black)

Gauge Size	4"
Applicable Model	DF25A-250

Caution system alert with a monitor lamp lighting on when an abnormal engine condition occurs. Refer to SERVICE MANUAL for the detail.

White

Black

34200-93J51-000 (White)

34200-93J40-000 (Black)

Gauge Size	4"
Applicable Model	DF40A-140A/200A

Exclusive for SUZUKI Troll Mode System. Automatically switches to low RPM scale when the SUZUKI Troll Mode System is activated.

White

Black

34200-93J32-000 (White)

34200-93J20-000 (Black)

Gauge Size	4"
Applicable Model	DF8A-30A

Full-scale 7000-RPM TACHOMETER can be used on electric-start models by using 4, 6 or 12 pole switch on rear of meter.

TRIM GAUGE

White Black

34800-93J11-000 (White)

34800-93J00-000 (Black)

Gauge Size	2"
Applicable Model	DF25A-250

Magnetic-type gauge shows trim angle for optimum performance and efficiency.

FUEL GAUGE

White Black

34300-93J11-000 (White)

34300-93J01-000 (Black)

Gauge Size	2"
Applicable Model	DF8A-250

FUEL GAUGE alone works with the US Standard 250Ω sending unit. Use the 150Ω adapter to connect the gauge to a European standard sending unit.

HOUR METER

White Black

34500-93J11-000 (White)

34500-93J00-000 (Black)

Gauge Size	2"
Applicable Model	DF8A-250

12-Volt-electric-motor driven meter indicates hours that your SUZUKI OUTBOARD MOTOR has been operated in order for you to know when each periodic service is required.

VOLTMETER

White Black

34600-93J11-000 (White)

34600-93J00-000 (Black)

Gauge Size	2"
Applicable Model	DF8A-250

To help your SUZUKI OUTBOARD MOTOR run at its best, monitor the charging system functioning with a VOLTMETER.

WATER-PRESSURE GAUGE

White Black

34650-93J31-000 (White)

34650-93J20-000 (Black)

Gauge Size	2"
Applicable Model	DF40A-250

Bourdon-tube type gauge measures cooling-water pressure. Select an appropriate INSTALLATION KIT for each model.

SPEEDOMETER

White

Black

(White) **34100-93J11-000**

(Black) **34100-93J00-000**

Gauge Size	4"
Maximum Speed	130 km/h, 80 mph

Bourdon-tube type speedometer with readings in km/h and mph. Includes vinyl tube, hardware and installation manual.

White

Black

(White) **34100-93J31-000**

(Black) **34100-93J20-000**

Gauge Size	4"
Maximum Speed	80 km/h, 50 mph

Bourdon-tube type speedometer with readings in km/h and mph. Includes vinyl tube, hardware and installation manual.

White

Black

(White) **34100-93J51-000**

(Black) **34100-93J40-000**

Gauge Size	4"
Maximum Speed	80 km/h, 45 knots

Bourdon-tube type speedometer with readings in km/h and knots. Includes vinyl tube, hardware and installation manual.

34100-93J60-000

Gauge Size	4"
Background	White
Maximum Speed	120 km/h, 65 knots

Bourdon-tube type speedometer with readings in km/h and knots. Includes vinyl tube, hardware and installation manual.

SPEEDOMETER SENDER ASSY

34190-95500-000

34190-87D00-000

INSTALLATION KIT for WATER-PRESSURE GAUGE

34660-90J02-000

Applicable Model DF40A-140A

34660-93J00-000

Applicable Model DF200-250

KIT includes fittings and hoses needed for motor to gauge connection.

34660-96J00-000

Applicable Model DF150-175/200A

REMOTE-CONTROL KIT for SINGLE ENGINE

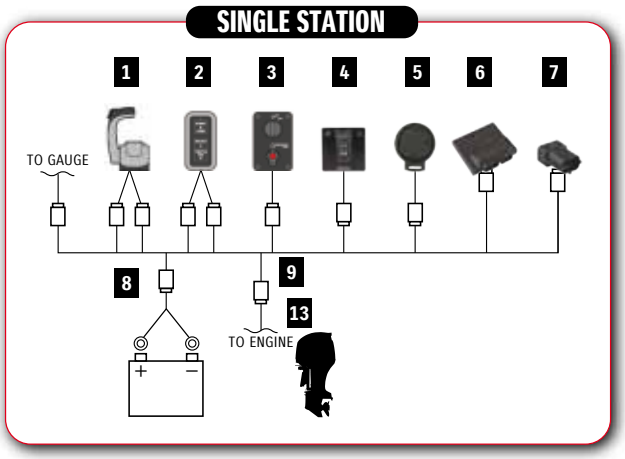

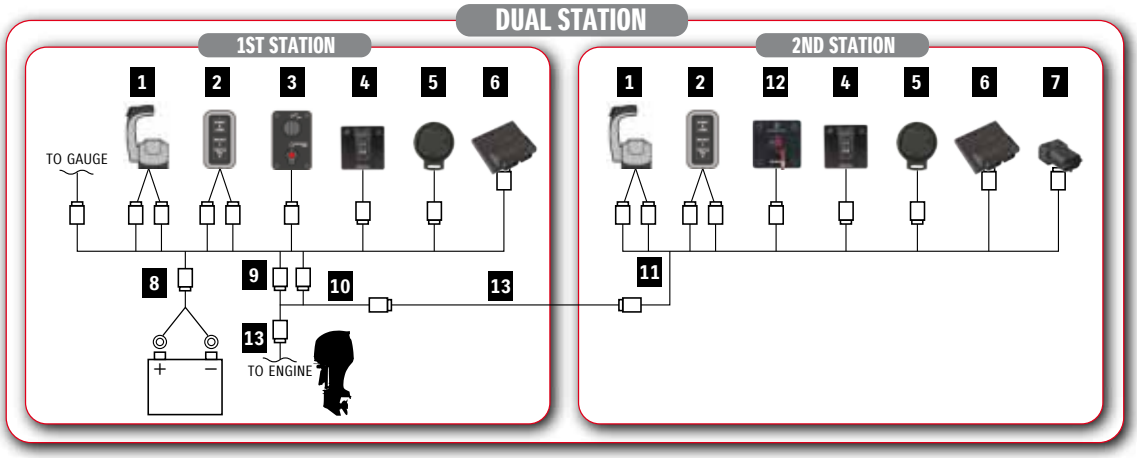

	REMOTE-CONTROL KIT for SINGLE ENGINE			KIT				Total Required Quantity	
				1st Station		2nd Station			
				67000-98JE0-000	67000-98J69-000	67000-98JF0-000	67000-98JL0-000		
	PART NUMBER	PART NAME	LENGTH	BINNACLE-MOUNT CONTROL KIT	FLUSH-MOUNT CONTROL KIT	2ND-STATION BINNACLE-MOUNT CONTROL KIT	2ND-STATION FLUSH-MOUNT CONTROL KIT	SINGLE STATION	DUAL STATION
1	67200-98J03-000	BINNACLE MOUNT R/C BOX		1	-	1	-	1	2
	67200-98J22-000	FLUSH MOUNT R/C BOX		-	1	-	1		
2	37100-98J11-000	CONTROL PANEL		1	1	1	1	1	2
3	37100-98J04-000	MAIN SWITCH PANEL		1	1	-	-	1	1
4	37860-87L00-000	TROLL MODE SWITCH PANEL		1	1	1	1	1	2
5	38500-93J90-000	WARNING BUZZER		1	1	1	1	1	2
	09407-08401-000	WARNING BUZZER CLAMP		1	1	1	1	1	2
6	36770-98J11-000	BOAT CONTROL MODULE		1	1	1	1	1	2
	36775-98J00-000	BCM HOLDER (L)		1	1	1	1	1	2
	36776-98J00-000	BCM HOLDER (R)		1	1	1	1	1	2
	33911-88BL0-000	BCM-CONNECT CAP		1	1	1	1	1	2
	33925-93J00-000	BCM CUSHION		1	1	1	1	1	2
7	33926-98J00-000	TERMINAL RESISTOR		2	2	-	-	2	2
8	36625-98J10-000	BATTERY-LEAD	6.5 m	1	1	-	-	1	1
9	36623-98J20-000	BCM #1 WIRING HARNESS		1	1	-	-	1	1
10	36622-98J00-000	DUAL-STATION WIRING HARNESS		-	-	1	1	-	1
11	36624-98J02-000	BCM #2 WIRING HARNESS		-	-	1	1	-	1
12	37803-93J04-000	EMERGENCY SWITCH PANEL		-	-	1	1	-	1
-	09403-13402-000	HARNESS CLAMP		10	10	10	10	-	-
13*	36620-98J30-000	MAIN WIRING HARNESS	6.5 m	-	-	-	-	1	2
	36620-98J40-000		9.5 m	-	-	-	-		
	36620-98J50-000	MAIN WIRING HARNESS EXTENSION	2.0 m	-	-	-	-	-	

* is not included in these kits.
Please purchase these items separately.

Basic Component

1 R/C BOX
BINNACLE MOUNT R/C BOX

FLUSH MOUNT R/C BOX

2 CONTROL PANEL

3 MAIN SWITCH PANEL

(for KEYLESS START SYSTEM)

4 TROLL MODE SWITCH PANEL

5 BUZZER

6 BOAT CONTROL MODULE

BCM HOLDER (L)
BCM HOLDER (R)

BCM CONNECT CAP

BCM CUSHION

7 TERMINAL RESISTOR

8 BATTERY-LEAD

9 BCM #1 WIRING HARNESS

10 DUAL-STATION WIRING HARNESS

11 BCM #2 WIRING HARNESS

12 EMERGENCY SWITCH PANEL

13 MAIN WIRING HARNESS

MAIN WIRING HARNESS EXTENSION

REMOTE-CONTROL KIT for DUAL ENGINE

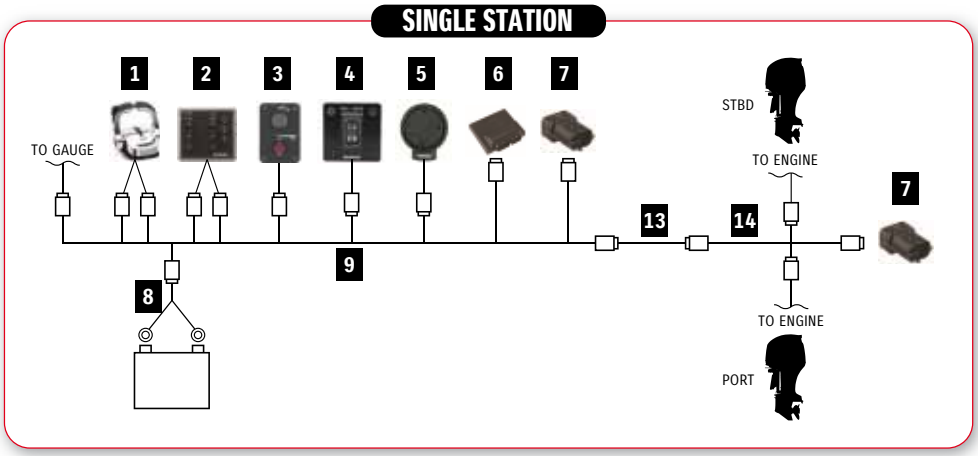

Installation Parts Different from SINGLE ENGINE

1 R/C BOX
BINNACLE MOUNT R/C BOX

2 CONTROL PANEL

12 EMERGENCY SWITCH PANEL

ENGINE WIRING HARNESS

	REMOTE-CONTROL KIT for DUAL ENGINE			KIT		Total Required Quantity	
				1st Station	2nd Station		
				67000-98JG0-000	67000-98JH0-000		
	PART NUMBER	PART NAME	LENGTH	BINNACLE-MOUNT CONTROL KIT	2ND-STATION BINNACLE-MOUNT CONTROL KIT	SINGLE STATION	DUAL STATION
1	67200-98J13-000	BINNACLE MOUNT R/C BOX		1	1	1	2
2	37100-98J21-000	CONTROL PANEL		1	1	1	2
3	37100-98J04-000	MAIN SWITCH PANEL		1	-	1	1
4	37860-87L00-000	TROLL MODE SWITCH PANEL		1	1	1	2
5	38500-93J90-000	WARNING BUZZER		1	1	1	2
	09407-08401-000	WARNING BUZZER CLAMP		1	1	1	2
6	36770-98J11-000	BOAT CONTROL MODULE		1	1	1	2
	36775-98J00-000	BCM HOLDER (L)		1	1	1	2
	36776-98J00-000	BCM HOLDER (R)		1	1	1	2
	33911-88BL0-000	BCM-CONNECT CAP		1	1	1	2
	33925-93J00-000	BCM CUSHION		1	1	1	2
7	33926-98J00-000	TERMINAL RESISTOR		2	-	2	2
8	36625-98J10-000	BATTERY-LEAD	6.5 m	1	-	1	1
9	36623-98J30-000	BCM #1 WIRING HARNESS		1	-	1	1
10	36622-98J00-000	DUAL-STATION WIRING HARNESS		-	1	-	1
11	36624-98J11-000	BCM #2 WIRING HARNESS		-	1	-	1
12	37803-93J04-000	EMERGENCY SWITCH PANEL		-	1	-	1
-	36621-98J00-000	ENGINE WIRING HARNESS		1	-	1	1
-	09403-13402-000	HARNESS CLAMP		15	10	-	-
13*	36620-98J30-000	MAIN WIRING HARNESS	6.5 m	-	-	1	2
	36620-98J40-000		9.5 m	-	-		
	36620-98J50-000	MAIN WIRING HARNESS EXTENSION	2.0 m	-	-	-	

* is not included in these kits.
Please purchase these items separately.

REMOTE-CONTROL KIT for TRIPLE ENGINE

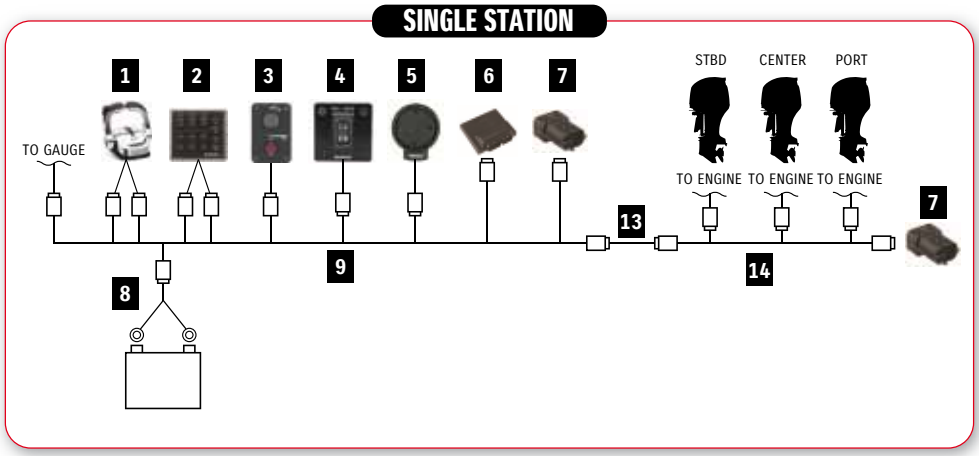

Installation Parts Different from SINGLE ENGINE

1 R/C BOX
BINNACLE MOUNT R/C BOX

2 CONTROL PANEL

12 EMERGENCY SWITCH PANEL

ENGINE WIRING HARNESS

	REMOTE-CONTROL KIT for TRIPLE ENGINE			KIT		Total Required Quantity	
				1st Station	2nd Station		
				67000-98JJ0-000	67000-98JK0-000		
	PART NUMBER	PART NAME	LENGTH	BINNACLE-MOUNT CONTROL KIT	2ND-STATION BINNACLE-MOUNT CONTROL KIT	SINGLE STATION	DUAL STATION
1	67200-98J13-000	BINNACLE MOUNT R/C BOX		1	1	1	2
2	37100-98J31-000	CONTROL PANEL		1	1	1	2
3	37100-98J04-000	MAIN SWITCH PANEL		1	-	1	1
4	37860-87L00-000	TROLL MODE SWITCH PANEL		1	1	1	2
5	38500-93J90-000	WARNING BUZZER		1	1	1	2
	09407-08401-000	WARNING BUZZER CLAMP		1	1	1	2
6	36770-98J11-000	BOAT CONTROL MODULE		1	1	1	2
	36775-98J00-000	BCM HOLDER (L)		1	1	1	2
	36776-98J00-000	BCM HOLDER (R)		1	1	1	2
	33911-88BL0-000	BCM-CONNECT CAP		1	1	1	2
	33925-93J00-000	BCM CUSHION		1	1	1	2
7	33926-98J00-000	TERMINAL RESISTOR		2	-	1	2
8	36625-98J10-000	BATTERY-LEAD	6.5 m	1	1	2	2
9	36623-98J30-000	BCM #1 WIRING HARNESS		1	-	1	1
10	36622-98J00-000	DUAL-STATION WIRING HARNESS		-	1	1	1
11	36624-98J11-000	BCM #2 WIRING HARNESS		-	1	-	1
12	37803-93J04-000	EMERGENCY SWITCH PANEL		-	1	-	1
-	36621-98J00-000	ENGINE WIRING HARNESS		1	-	-	1
-	09403-13402-000	HARNESS CLAMP		18	10	-	-
13*	36620-98J30-000	MAIN WIRING HARNESS	6.5 m	-	-	1	2
	36620-98J40-000		9.5 m	-	-		
	36620-98J50-000	MAIN WIRING HARNESS EXTENSION	2.0 m	-	-	-	

* is not included in these kits.
Please purchase these items separately.

REMOTE-CONTROL KIT for QUADRUPLE ENGINE

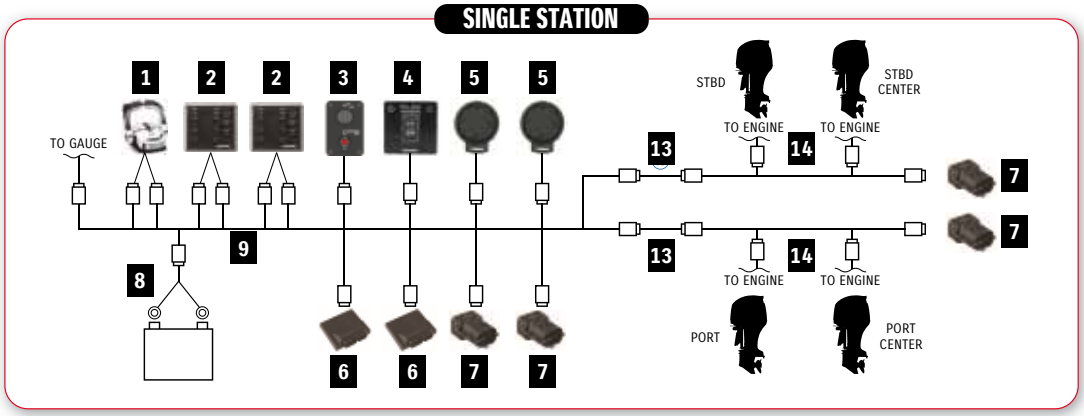

Installation Parts Different from SINGLE ENGINE

1 R/C BOX
BINNACLE MOUNT R/C BOX

2 CONTROL PANEL

12 EMERGENCY SWITCH PANEL

ENGINE WIRING HARNESS

	REMOTE-CONTROL KIT for QUADRUPLE ENGINE			KIT		Total Required Quantity	
				1st Station	2nd Station		
				67000-98J71-000	67000-98J81-000		
	PART NUMBER	PART NAME	LENGTH	BINNACLE-MOUNT CONTROL KIT	2ND-STATION BINNACLE-MOUNT CONTROL KIT	SINGLE STATION	DUAL STATION
1	67200-98J13-000	BINNACLE MOUNT R/C BOX		1	1	1	2
2	37100-98J21-000	CONTROL PANEL		**2**	**2**	**2**	**4**
3	37100-98J04-000	MAIN SWITCH PANEL		1	-	1	1
4	37860-87L00-000	TROLL MODE SWITCH PANEL		1	1	1	2
5	38500-93J90-000	WARNING BUZZER		2	2	2	4
	09407-08401-000	WARNING BUZZER CLAMP		2	2	2	4
6	36770-98J20-000	BOAT CONTROL MODULE		2	2	2	4
	36775-98J00-000	BCM HOLDER (L)		2	2	2	4
	36776-98J00-000	BCM HOLDER (R)		2	2	2	4
	33911-88BL0-000	BCM-CONNECT CAP		2	2	2	4
	33925-93J00-000	BCM CUSHION		2	2	2	4
7	33926-98J00-000	TERMINAL RESISTOR		4	-	4	4
8	36625-98J10-000	BATTERY-LEAD	6.5 m	2	-	2	2
9	36623-98J30-000	BCM #1 WIRING HARNESS		1	-	1	1
10	36622-98J00-000	DUAL-STATION WIRING HARNESS		-	2	-	2
11	36624-98J11-000	BCM #2 WIRING HARNESS		-	1	-	1
12	37803-93J04-000	EMERGENCY SWITCH PANEL		-	1	-	1
-	36621-98J00-000	ENGINE WIRING HARNESS		2	-	2	2
-	09403-13402-000	HARNESS CLAMP		20	15	-	-
13*	36620-98J30-000	MAIN WIRING HARNESS	6.5 m	-	-	2	4
	36620-98J40-000		9.5 m	-	-		
	36620-98J50-000	MAIN WIRING HARNESS EXTENSION	2.0 m	-	-	-	

* is not included in these kits.
Please purchase these items separately.

EXTRA OPTIONS AND INFORMATION

SUZUKI Precision Control and Lean Burn

LEAN BURN

Fuel efficiency matters whether you're boating for pleasure or profit. Our Lean Burn Fuel Control Technology combined with Suzuki Precision Control, delivers the optimum fuel/air mixture to the engine. The system is designed to save fuel both at low speeds and up into the cruising range.

LEAN BURN

COMPARISON OF FUEL ECONOMY

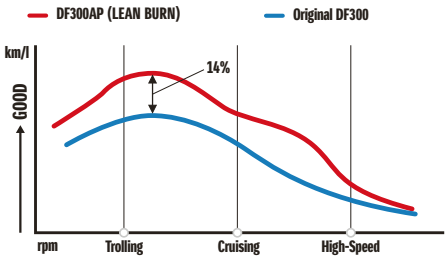

Uses 14% less fuel compared to the original DF300, mainly in the cruising range where the engine is used a majority of the time.

Data used in the graph was obtained through in-house testing under uniformed conditions. Results will vary depending upon operating conditions (boat design, size, weight, etc.)

COUNTER SELECT CONNECTOR

36612-98J20-000

Applicable Model DF200AP/250AP/300AP

Converts DF300AP/250AP to counter rotation specification.

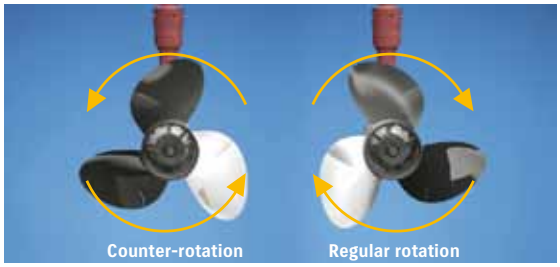

Suzuki Selective Rotation

In multi-outboard installations on large boats, a counter-rotation outboard is usually paired with a regular rotation model to help keep the boat traveling on an even keel and in a straight line. AP Models are built with special counter rotating gearing in the lower unit, which causes the prop to rotate in the opposite direction. Suzuki Selective Rotation eliminates the need to purchase a dedicated counter-rotation outboard by using a special switch that when connected to a circuit inside of the engine compartment, turns a regular rotation outboard into a counter-rotation model with a counter rotational propeller.* This industry first is made possible through a special, unified design of gears, shaft, and bearings in the lower unit that are designed to operate reliably and efficiently in either regular or counter-rotation directions.

* Make sure you consult your dealer before changing Regular Rotation to Counter Rotation (or vice versa).

SUZUKI SELECTIVE ROTATION

TROLL MODE SWITCH PANEL

37860-87L00-000

Applicable Model DF40A-140A/200A/AP/ 250AP/ 300AP

Activates SUZUKI Troll Mode System and controls RPM from idling engine speed up to 1200 rpm at every 50 rpm.

SUZUKI TROLL MODE SYSTEM

An optional extra on Remote Control models from over DF40A, this easy-to-use system lets you adjust engine speed in 50rpm increments, giving highly precise control at low revs. With its own tachometer and control switch, it works alongside our multi-function gauges and analogue gauges. (Suzuki Troll Mode System is originally equipped with Tiller Handle models from over DF40A.)

*Not Applicable for DF150,175,200,225,250

REMOTE-CONTROL KIT for KEYLESS START SYSTEM

REMOTE-CONTROL KIT for SINGLE ENGINE

	PART NUMBER	PART NAME	LENGTH	KIT Single Station 67000-98J91-000 BINNACLE-MOUNT CONTROL KIT	KIT Single Station 67000-98JC1-000 FLUSH-MOUNT CONTROL KIT	Total Required Quantity SINGLE STATION
1	67200-98J03-000	BINNACLE MOUNT R/C BOX		1	-	1
	67200-98J22-000	FLUSH MOUNT R/C BOX		-	1	1
2	37100-98J11-000	CONTROL PANEL		1	1	1
3	37100-96L00-000	MAIN SWITCH PANEL		1	1	1
4	37860-87L00-000	TROLL MODE SWITCH PANEL		1	1	1
5	38500-93J90-000	WARNING BUZZER		1	1	1
	09407-08401-000	WARNING BUZZER CLAMP		1	1	1
6	36770-98J11-000	BOAT CONTROL MODULE		1	1	1
	36775-98J00-000	BCM HOLDER (L)		1	1	1
	36776-98J00-000	BCM HOLDER (R)		1	1	1
	33911-88BL0-000	BCM-CONNECT CAP		1	1	1
	33925-93J00-000	BCM CUSHION		1	1	1
7	33926-98J00-000	TERMINAL RESISTOR		2	2	2
8	36625-98J10-000	BATTERY-LEAD	6.5 m	1	1	1
9	36623-98J20-000	BCM #1 WIRING HARNESS		1	1	1
-	09403-13402-000	HARNESS CLAMP		10	10	-
13*	36620-98J30-000	MAIN WIRING HARNESS	6.5 m	-	-	1
	36620-98J40-000		9.5 m	-	-	
	36620-98J50-000	MAIN WIRING HARNESS EXTENSION	2.0 m	-	-	-

* is not included in these kits.
Please purchase these items separately.

REMOTE-CONTROL KIT for DUAL ENGINE

	PART NUMBER	PART NAME	LENGTH	KIT Single Station 67000-98JA1-000 BINNACLE-MOUNT CONTROL KIT	Total Required Quantity SINGLE STATION
1	67200-98J13-000	BINNACLE MOUNT R/C BOX		1	1
2	37100-98J21-000	CONTROL PANEL		1	1
3	37100-96L00-000	MAIN SWITCH PANEL		1	1
4	37860-87L00-000	TROLL MODE SWITCH PANEL		1	1
5	38500-93J90-000	WARNING BUZZER		1	1
	09407-08401-000	WARNING BUZZER CLAMP		1	1
6	36770-98J11-000	BOAT CONTROL MODULE		1	1
	36775-98J00-000	BCM HOLDER (L)		1	1
	36776-98J00-000	BCM HOLDER (R)		1	1
	33911-88BL0-000	BCM-CONNECT CAP		1	1
	33925-93J00-000	BCM CUSHION		1	1
7	33926-98J00-000	TERMINAL RESISTOR		2	2
8	36625-98J10-000	BATTERY-LEAD	6.5 m	1	1
9	36623-98J30-000	BCM #1 WIRING HARNESS		1	1
-	36621-98J00-000	ENGINE WIRING HARNESS		1	1
-	09403-13402-000	HARNESS CLAMP		15	-
13*	36620-98J30-000	MAIN WIRING HARNESS	6.5 m	-	1
	36620-98J40-000		9.5 m	-	
	36620-98J50-000	MAIN WIRING HARNESS EXTENSION	2.0 m	-	-
14	36664-96L00-000	CAN EXTENSION HARNESS	0.8 m	-	1

* is not included in these kits.
Please purchase these items separately..

REMOTE-CONTROL KIT for TRIPLE ENGINE

	PART NUMBER	PART NAME	LENGTH	KIT 1st Station 67000-98JB1-000 BINNACLE-MOUNT CONTROL KIT	Total Required Quantity SINGLE STATION
1	67200-98J13-000	BINNACLE MOUNT R/C BOX		1	1
2	37100-98J31-000	CONTROL PANEL		1	1
3	37100-96L00-000	MAIN SWITCH PANEL		1	1
4	37860-87L00-000	TROLL MODE SWITCH PANEL		1	1
5	38500-93J90-000	WARNING BUZZER		1	1
	09407-08401-000	WARNING BUZZER CLAMP		1	1
6	36770-98J11-000	BOAT CONTROL MODULE		1	1
	36775-98J00-000	BCM HOLDER (L)		1	1
	36776-98J00-000	BCM HOLDER (R)		1	1
	33911-88BL0-000	BCM-CONNECT CAP		1	1
	33925-93J00-000	BCM CUSHION		1	1
7	33926-98J00-000	TERMINAL RESISTOR		2	1
8	36625-98J10-000	BATTERY-LEAD	6.5 m	1	2
9	36623-98J30-000	BCM #1 WIRING HARNESS		1	1
-	36621-98J10-000	ENGINE WIRING HARNESS		1	1
-	09403-13402-000	HARNESS CLAMP		18	-
13*	36620-98J30-000	MAIN WIRING HARNESS	6.5 m	-	1
	36620-98J40-000		9.5 m	-	
	36620-98J50-000	MAIN WIRING HARNESS EXTENSION	2.0 m	-	-
14	36664-96L00-000	CAN EXTENSION HARNESS	0.8 m	-	2

* is not included in these kits.
Please purchase these items separately.

REMOTE-CONTROL KIT for QUADRUPLE ENGINE

	PART NUMBER	PART NAME	LENGTH	KIT 1st Station 67000-98JD0-000 BINNACLE-MOUNT CONTROL KIT	Total Required Quantity SINGLE STATION
1	67200-98J13-000	BINNACLE MOUNT R/C BOX		1	1
2	37100-98J21-000	CONTROL PANEL		2	2
3	37100-96L00-000	MAIN SWITCH PANEL		1	1
4	37860-87L00-000	TROLL MODE SWITCH PANEL		1	1
5	38500-93J90-000	WARNING BUZZER		2	2
	09407-08401-000	WARNING BUZZER CLAMP		2	2
6	36770-98J11-000	BOAT CONTROL MODULE		2	2
	36775-98J00-000	BCM HOLDER (L)		2	2
	36776-98J00-000	BCM HOLDER (R)		2	2
	33911-88BL0-000	BCM-CONNECT CAP		2	2
	33925-93J00-000	BCM CUSHION		2	2
7	33926-98J00-000	TERMINAL RESISTOR		4	4
8	36625-98J10-000	BATTERY-LEAD	6.5 m	2	2
9	36623-98J30-000	BCM #1 WIRING HARNESS		1	1
-	36621-98J00-000	ENGINE WIRING HARNESS		2	2
-	09403-13402-000	HARNESS CLAMP		20	-
13*	36620-98J30-000	MAIN WIRING HARNESS	6.5 m	-	2
	36620-98J40-000		9.5 m	-	
	36620-98J50-000	MAIN WIRING HARNESS EXTENSION	2.0 m	-	-
14	36664-96L00-000	CAN EXTENSION HARNESS	0.8 m		3

* is not included in these kits.
Please purchase these items separately.

MAIN SWITCH PANEL

37100-98J04-000
single ignition with Emergency-stop switch

BOAT CONTROL PANEL

37100-98J11-000
for Single-Engine

37100-98J21-000
for Dual-Engine, Quadruple-Engine

37100-98J31-000
for Triple-Engine

BOAT CONTROL MODULE (BCM)

36770-98J11-000

36770-98J20-000
for Quadruple-Engine

BCM HOLDER (L/R)

36775-98J00-000 **Holder (L)**

36776-98J00-000 **Holder (R)**

BCM-CONNECT CAP

33911-88BL0-000

BCM CUSHION

33925-93J00-000

MAIN WIRING HARNESS

36620-98J30-000
6.5 meters for control system

36620-98J40-000
9.5 meters for control system

MAIN-WIRING-HARNESS EXTENSION

36620-98J50-000
2.0 meters for control system

ENGINE WIRING HARNESS

36621-98J00-000
for Dual-Engine

36621-98J10-000
for Triple-Engine

DUAL-STATION WIRING HARNESS

36622-98J00-000
for Dual-station control system

BCM #1 WIRING HARNESS

36623-98J20-000
for Single-Engine and Single (First) station

36623-98J30-000
for Dual or Triple-Engine and Single (First) station

36623-98J40-000
for Quadruple-Engine

BCM #2 WIRING HARNESS

36624-98J02-000
for Single-Engine and Second station

36624-98J11-000
for Dual or Triple-Engine and Second station

36623-98J40-000
for Quadruple-Engine and Second station

BATTERY LEAD

36625-98J10-000
6.5 meters

TERMINAL RESISTOR

33926-98J00-000

RIGGING TUBE

990C0-20010-000
Applicable Model DF70A-DF300AP

REMOTE-CONTROL KIT for SINGLE ENGINE

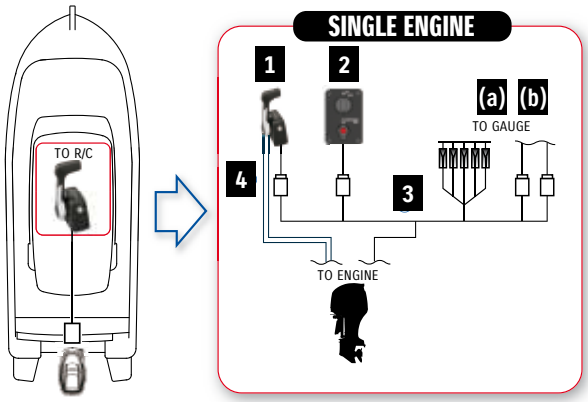

Gauge Kit Component

(a) TACHOMETER (FACE: WHITE)

(b) TRIM GAUGE (FACE: WHITE)

Basic Kit Component

1 R/C BOX
BINNACLE MOUNT R/C BOX

FLUSH MOUNT R/C BOX

2 SINGLE IGNITION WITH E/S SWITCH

3 MAIN WIRING HARNESS

4 R/C CABLE
(ORT THROTTLE AND SHIFT CABLES)

REMOTE-CONTROL KIT for SINGLE ENGINE				KIT					Required
				67000-88L00-000	67000-88L20-000	67000-93J27-000	67000-93J92-000	67000-93J82-000	
	PART NUMBER	PART NAME	LENGTH	BINNACLE-MOUNT CONTROL KIT	BINNACLE-MOUNT CONTROL KIT	FLUSH-MOUNT CONTROL KIT	FLUSH-MOUNT CONTROL KIT	SIDE-MOUNT CONTROL KIT	SINGLE STATION
1	67200-88L00-000	BINNACLE MOUNT R/C BOX		1	1	-	-	-	
1	67200-93J33-000	FLUSH MOUNT R/C BOX		-	-	1	1	-	1
1	67200-93J51-000	SIDE MOUNT R/C BOX		-	-	-	-	1	
2	37100-96J24-000	SINGLE IGNITION WITH E/S SWITCH		1	1	1	1	A*	1
3	36620-93J02-000	MAIN WIRING HARNESS	6.5 m	-	1	-	1	1	1
3	36620-93J52-000		5.0 m	-	-	-	-	-	
3	36620-93J62-000		8.0 m	-	-	-	-	-	
(a)	34200-93J12-000	TACHOMETER (FACE: WHITE)		-	1	-	1	1	
(b)	34800-93J11-000	TRIM GAUGE (FACE: WHITE)		-	1	-	1	1	
4	67320-93J00-000	R/C CABLE (ORT THROTTLE AND SHIFT CABLES)	8 ft. / 2.44 m						2
4	67320-93J10-000		10 ft. / 3.05 m						
4	67320-93J20-000		12 ft. / 3.66 m						
4	67320-93J30-000		14 ft. / 4.27 m						
4	67320-93J40-000		16 ft. / 4.88 m						
4	67320-93J50-000		18 ft. / 5.49 m						
4	67320-93J60-000		20 ft. / 6.10 m						
4	67320-93J70-000		22 ft. / 6.71 m						
4	67320-93J80-000		24 ft. / 7.32 m						
-	36620-93J10-000	MAIN WIRING HARNESS EXTENSION	2 m						
-	36620-93J40-000		3 m						

■ The high-lighted products are optional. Please make your best choice depending on your boat.
A* The side mount control box is equipped with ignition switch, emergency switch and warning buzzer with clamp.

REMOTE-CONTROL KIT for DUAL ENGINE

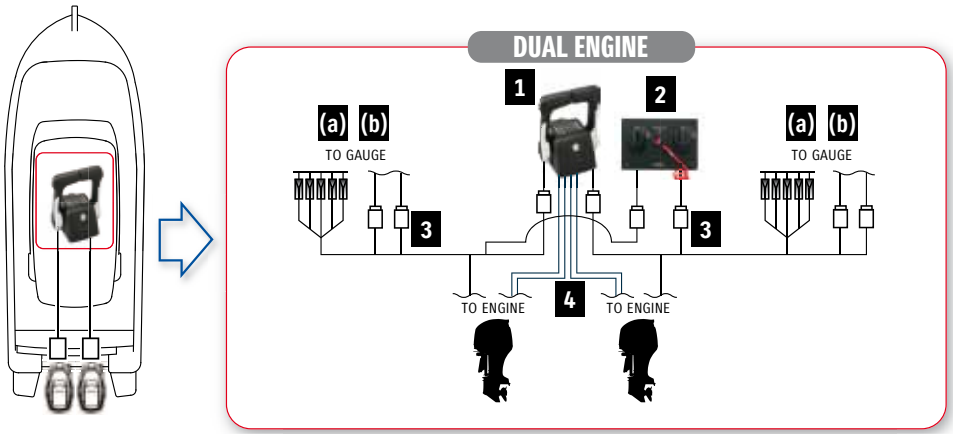

Basic Kit Component

1 BINNACLE MOUNT R/C BOX

2 DUAL IGNITION WITH E/S SWITCH

3 MAIN WIRING HARNESS

4 R/C CABLE (ORT THROTTLE AND SHIFT CABLES)

REMOTE-CONTROL KIT for DUAL ENGINE				KIT		Required
				67000-88L10-000	67000-88L30-000	
	PART NUMBER	PART NAME	LENGTH	BINNACLE-MOUNT CONTROL KIT	BINNACLE-MOUNT CONTROL KIT	SINGLE STATION
1	67200-88L10-000	BINNACLE MOUNT R/C BOX		1	1	1
2	37100-96J14-000	DUAL IGNITION WITH E/S SWITCH		1	1	1
3	36620-93J02-000	MAIN WIRING HARNESS	6.5 m	–	2	2
	36620-93J52-000		5.0 m	–	–	
	36620-93J62-000		8.0 m	–	–	
(a)	34200-93J12-000	TACHOMETER (FACE: WHITE)		–	2	
(b)	34800-93J11-000	TRIM GAUGE (FACE: WHITE)		–	2	
4	67320-93J00-000	R/C CABLE (ORT THROTTLE AND SHIFT CABLES)	8 ft./2.44 m			4
	67320-93J10-000		10 ft./3.05 m			
	67320-93J20-000		12 ft./3.66 m			
	67320-93J30-000		14 ft./4.27 m			
	67320-93J40-000		16 ft./4.88 m			
	67320-93J50-000		18 ft./5.49 m			
	67320-93J60-000		20 ft./6.10 m			
	67320-93J70-000		22 ft./6.71 m			
	67320-93J80-000		24 ft./7.32 m			
-	36620-93J10-000	MAIN WIRING HARNESS EXTENSION	2 m		1	
	36620-93J40-000		3 m			

■ The high-lighted products are optional. Please make your best choice depending on your boat.

Gauge Kit Component

(a) TACHOMETER (FACE: WHITE)

(b) TRIM GAUGE (FACE: WHITE)

REMOTE-CONTROL KIT for SINGLE ENGINE (KEYLESS START SYSTEM)

	REMOTE-CONTROL KIT for SINGLE ENGINE			KIT					Required
				67000-88L40-000	67000-88L60-000	67000-93JF0-000	67000-93JK0-000	67000-93JJ1-000	
	PART NUMBER	PART NAME	LENGTH	BINNACLE-MOUNT CONTROL KIT	BINNACLE-MOUNT CONTROL KIT	FLUSH-MOUNT CONTROL KIT	FLUSH-MOUNT CONTROL KIT	SIDE-MOUNT CONTROL KIT	SINGLE STATION
1	67200-88L00-000	BINNACLE MOUNT R/C BOX		1	1	-	-	-	
	67200-93J33-000	FLUSH MOUNT R/C BOX		-	-	1	1	-	1
	67200-96L01-000	SIDE MOUNT R/C BOX		-	-	-	-	1	
2	37100-96L10-000	SINGLE IGNITION WITH E/S SWITCH		1	1	1	1	A*	1
3	36620-93J02-000	MAIN WIRING HARNESS	6.5 m	-	1	-	1	1	1
	36620-93J52-000		5.0 m	-	-	-	-	-	
	36620-93J62-000		8.0 m	-	-	-	-	-	
(a)	34200-93J12-000	TACHOMETER (FACE: WHITE)		-	1	-	1	1	
(b)	34800-93J11-000	TRIM GAUGE (FACE: WHITE)		-	1	-	1	1	
4	67320-93J00-000	R/C CABLE (ORT THROTTLE AND SHIFT CABLES)	8 ft./2.44 m						2
	67320-93J10-000		10 ft./3.05 m						
	67320-93J20-000		12 ft./3.66 m						
	67320-93J30-000		14 ft./4.27 m						
	67320-93J40-000		16 ft./4.88 m						
	67320-93J50-000		18 ft./5.49 m						
	67320-93J60-000		20 ft./6.10 m						
	67320-93J70-000		22 ft./6.71 m						
	67320-93J80-000		24 ft./7.32 m						
-	36620-93J10-000	MAIN WIRING HARNESS EXTENSION	2 m						
	36620-93J40-000		3 m						

■ The high-lighted products are optional. Please make your best choice depending on your boat.
A*The side mount control box is equipped with ignition switch, emergency switch and warning buzzer with clamp.

REMOTE-CONTROL KIT for DUAL ENGINE (KEYLESS START SYSTEM)

	REMOTE-CONTROL KIT for DUAL ENGINE			KIT		Required
				67000-88L50-000	67000-88L70-000	
	PART NUMBER	PART NAME	LENGTH	BINNACLE-MOUNT CONTROL KIT	BINNACLE-MOUNT CONTROL KIT	SINGLE STATION
1	67200-88L10-000	BINNACLE MOUNT R/C BOX		1	1	1
2	37100-96L20-000	DUAL IGNITION WITH E/S SWITCH		1	1	1
3	36620-93J02-000	MAIN WIRING HARNESS	6.5 m	–	2	2
	36620-93J52-000		5.0 m	–	–	
	36620-93J62-000		8.0 m	–	–	
(a)	34200-93J12-000	TACHOMETER (FACE: WHITE)		–	2	
(b)	34800-93J11-000	TRIM GAUGE (FACE: WHITE)		–	2	
4	67320-93J00-000	R/C CABLE (ORT THROTTLE AND SHIFT CABLES)	8 ft./2.44 m			4
	67320-93J10-000		10 ft./3.05 m			
	67320-93J20-000		12 ft./3.66 m			
	67320-93J30-000		14 ft./4.27 m			
	67320-93J40-000		16 ft./4.88 m			
	67320-93J50-000		18 ft./5.49 m			
	67320-93J60-000		20 ft./6.10 m			
	67320-93J70-000		22 ft./6.71 m			
	67320-93J80-000		24 ft./7.32 m			
-	36620-93J10-000	MAIN WIRING HARNESS EXTENSION	2 m		1	
	36620-93J40-000		3 m			
-	36621-96L00-000	HARNSS ASSY,DUAL KLS ENG		1	1	
	36663-96L10-000	WIRE COMP,KLS CAN EXT	2.0 m	1	1	
	36664-96L00-000	CAN EXTENSION HARNESS	0.8 m	1	1	

■ The high-lighted products are optional. Please make your best choice depending on your boat.

COMPONENT OF MECHANICAL REMOTE CONTROL SYSTEM

BINNACLE-MOUNT REMOTE CONTROL BOX

67200-88L00-000
for Single-Engine
Applicable Model DF8A-250

67200-88L10-000
for Dual-Engine
Applicable Model DF8A-250

FLUSH-MOUNT REMOTE CONTROL BOX

67200-93J33-000
for Single-Engine
Applicable Model DF8A-250

SIDE-MOUNT REMOTE CONTROL BOX

67200-91J20-000
for Single-Engine
Applicable Model DF4A-6A

67200-94J20-000
for Single-Engine. With warning buzzer
Applicable Model DF8A-30A

67200-93J51-000
for Single-Engine. With PTT switch
Applicable Model DF9.9B-250

SPACER KIT for REMOTE CONTROL BOX

67500-88L00-000
for Single Binnacle-mount type
Applicable Model DF8A-250

67500-88L10-000
for Dual Binnacle-mount type
Applicable Model DF8A-250

BATTERY LEAD

36625-93J10-000
6.7 meters
Applicable Model DF70-90A/150/175/200A/200-250

36625-93J00-000
3.9 meters
Applicable Model DF70-90A/150/175/200A/200-250

MAIN WIRING HARNESS

36620-93J02-000
6.5 meters for Control system
Applicable Model DF40A-250

36620-93J52-000
5.0 meters for Control system
Applicable Model DF40A-250

36620-94L00-000
6.5 meters for Control system
Applicable Model DF25A/30A

36620-93J62-000
8.0 meters for Control system
Applicable Model DF40A-250

36620-94J01-000
6.5 meters for Control system without Monitor-signal wire, Trim-sender wire and PTT-SW wire
Applicable Model DF8A/9.9B/15A/20A

36620-94L10-000
6.5 meters for Control system without Trim-sender wire and PTT-SW wire
Applicable Model DF25A/30A

MAIN WIRING HARNESS EXTENSION

36620-93J10-000
2.0 meters for Control system
Applicable Model DF9.9B-250

36620-93J40-000
3.0 meters for Control system
Applicable Model DF9.9B-250

IGNITION SWITCH PANEL

37100-96J00-000
Single ignition
Applicable Model DF9.39B-250

37100-99E00-000
Single ignition

37100-96J24-000
Single ignition with Emergency-stop switch
Applicable Model DF9.9B-250

37100-96J14-000
Dual ignition with Emergency-stop switch
Applicable Model DF9.9B-250

EMERGENCY SWITCH PANEL

37803-93J04-000
Applicable Model DF9.39B-300AP

37803-99E04-000
Applicable Model DF25/30

LIGHTING SWITCH PANEL

37210-93J00-000
Applicable Model DF9.39B-250

PTT SWITCH PANEL

37805-93J00-000
Applicable Model DF40A-250

WARNING BUZZER

38500-93J90-000
Applicable Model DF9.39B-300AP

REMOTE-CONTROL CABLE

GENUINE REMOTE-CONTROL CABLES employ the latest in cable technology. The inner core is encased in nylon, and travels back and forth in a high-density polyethylene liner.

67320-93J00-000
8 feet 2.44 meters
Applicable Model DF4A-250

67320-93J10-000
10 feet 3.05 meters
Applicable Model DF4A-250

67320-93J20-000
12 feet 3.66 meters
Applicable Model DF4A-250

67320-93J30-000
14 feet 4.27 meters
Applicable Model DF4A-250

67320-93J40-000
16 feet 4.88 meters
Applicable Model DF4A-250

67320-93J50-000
18 feet 5.49 meters
Applicable Model DF4A-250

67320-93J60-000
20 feet 6.10 meters
Applicable Model DF4A-250

67320-93J70-000
22 feet 6.71 meters
Applicable Model DF4A-250

67320-93J80-000
24 feet 7.32 meters
Applicable Model DF4A-250

REMOTE-CONTROL ATTACHING KIT

Converts MF model to REMOTE-CONTROL model

67101-97L00-000
Applicable Model DF4A-6A

67130-94L00-000
Applicable Model DF25A/30A

67130-94L10-000
Applicable Model DF25ATH/30ATH

67130-89L04-000
Applicable Model DF9.9B/15A/20A

67130-99J01-000
CLAMP BRACKET SET (41100-99J00-0EP) is required for installing.
Applicable Model DF8A/9.9A

TWIN REMOTE-CONTROL ATTACHMENT KIT

67140-95600-000
Applicable Model DF8A-250

TROLL MODE SWITCH PANEL

37860-87L00-000
Applicable Model DF40A-140A/200A/AP/ 250AP/ 300AP

Activates SUZUKI Troll Mode System and controls RPM from idling engine speed up to 1200 rpm at every 50 rpm.

CLAMP BRACKET SET

41100-99JL0-YAY
Applicable Model DF8A/9.9A

THRU-HULL FITTING AND HOSE KIT

990C0-20010-000
Single, dual, triple engine installation. One kit is necessary for each engine used. When attaching the rigging tube to the engine, adapter kit 67300-90J00-000/67300-93J00-000 is also required for each engine.
Applicable Model DF70AT-140T/Z, DF70A-DF300AP DF150T/Z-300T/Z (model year 2006-)

THRU-HULL-TUBE ATTACHMENT

67300-90J00-000
Applicable Model DF70A-90A

67300-93J00-000
Applicable Model DF200-250

HOSE ADAPTER KIT

KIT.A

67300-92J00-000
Applicable Model DF100A/115A/140A

67300-96L00-000
Applicable Model DF150TG/175TG, DF200AP

67300-96L10-000
Applicable Model DF150/175, DF200A

67300-98J00-000
Applicable Model DF250AP/300AP

KIT.B

67300-98J10-000
Applicable Model DF100A/115A/140A DF150/175, DF150TG/ 175TG, DF200A, DF200AP

PART NUMBER	PART NAME	KIT A				KIT B
		67300-92J00-000	67300-96L00-000	67300-96L10-000	67300-98J00-000	67300-98J10-000
61124-92J10-000	GROMMET	1	–	–	–	–
61124-96J50-000		–	–	1	–	–
61124-96J60-000		–	1	–	–	–
61124-98J20-000		–	–	–	1	–
67361-90J10-000	ATTACHMENT	1	1	1	1	1
09208-06009-000	PIN	2	2	2	2	2
09383-04002-000	E RING	2	2	2	2	2

TILLER HANDLE KIT

63002-88L22-YAY

Applicable Model
DF40A/50A

63002-88L12-YAY

Applicable Model
DF60A/50AV/60AV

63002-87L13-YAY

Applicable Model
DF70A-90A

63002-90J33-YAY

Applicable Model
DF100A/115A

Main features

Tachometer with warning indicators

Three-position angle adjustable bracket

Troll mode switch

- Activates SUZUKI Troll Mode System and controls RPM from idling engine speed up to 1200 rpm at every 50 rpm.

Power trim & tilt switch and throttle grip friction adjuster

DUAL-ENGINE TIE-BAR

67600-90J00-000
Stainless steel
Applicable Model DF100A-140A

67600-93J00-000
Stainless steel
Applicable Model DF150-250

STEERING EXTENSION KIT

67630-93J00-000
for installation of DUAL-ENGINE TIE-BAR (67600-93J00-000)
Applicable Model DF150-250

DRAG-LINK KIT

67700-87L01-000
Applicable Model DF70A-90A

67700-93J00-000
Applicable Model DF40A-60A/200-250

67700-96J00-000
Applicable Model DF150-175/200A/AP

67701-87J11-000
Applicable Model DF40A-60A/200-250

67701-87L01-000
Applicable Model DF70A-90A

67701-90J01-000
Applicable Model DF100A-140A

67701-96J00-000
Applicable Model DF150-175/200A/AP

67701-94L00-000
Applicable Model DF25A/30A

67701-99J02-000
Applicable Model DF8A-DF20A

STEERING-BRACKET ATTACHMENT

43755-87L00-000
Applicable Model DF70A/90A

43755-88L00-000
Applicable Model DF40A-60A

43755-94L00-000
Applicable Model DF25A-30A

43755-99J00-000
Applicable Model DF8A-20A

STEERING CABLE SEAL

41161-94400-000
Applicable Model DF8A-250

BATTERY CHARGING KIT

- Optional equipment for battery charging
- Required for : DF4A/5A/6A, DF8A/9.9A, DF9.9B/15A/20A, DF25A/30A.

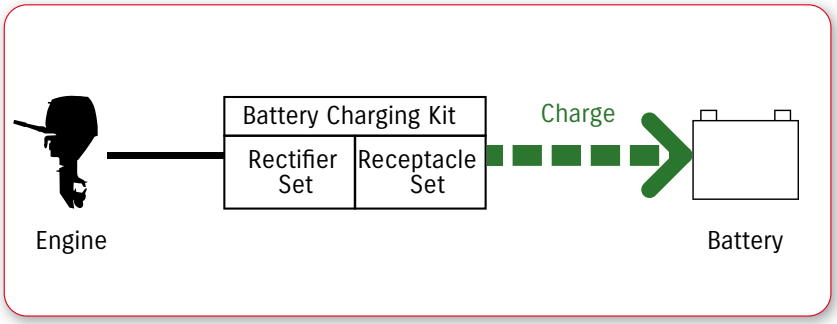

ELECTRIC STARTER KIT

Optional materials for Converting Manual Starter model into Electric Starter model.
* Electric Starter Kit functions as Battery charging Kit as well.

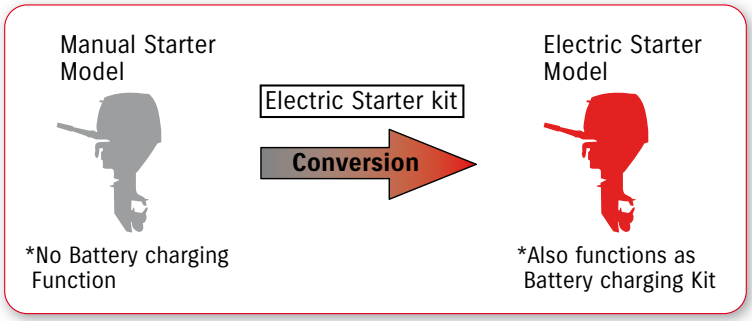

DF series

APPLICABLE MODEL	BATTERY CHARGING KIT – RECTIFIER and REGULATOR SET – RECEPTACLE KIT	ELECTRIC STARTER KIT
DF4A/5A/6A	32000-97L00-000 – 32801-97L00-000 – 39600-97L00-000	–
DF8A/9.9A	32000-99J00-000 – 32801-95J01-000 – 39600-94J01-000	31000-99J01-000
DF9.9B/15A/20A	32000-89L00-000 – 32801-89L00-000 – 39600-89L00-000	31000-89L06-000
DF25A/30A	32000-94L00-000 – 32800-88L00-000 – 39600-94L00-000 – 32815-94L00-000 – (BRACKET) – 01550-06207-000 (BOLT)	31000-94L02-000

BATTERY CHARGING KIT

ELECTRIC STARTER KIT

BATTERY ISOLATOR LEAD SET

Optional equipment for charging additional battery.

33830-98J11-000

Applicable Model	DF150T/Z/175T/Z/ 200A/AP/250AP/ 300AP

FUEL SYSTEM

FUEL TANK

NOTE : These tanks do not meet US-EPA requirements.

65000-99100-000
12 liter plastic tank with no fuel-level gauge
Applicable Model DF4A/5A/6A

65000-95D01-000
25 liter plastic tank with a fuel-level gauge
Applicable Model DF8A-140A

65000-89L10-000
12 liter plastic tank
Applicable Model DF8A-20A

REPLACEMENT FUEL CAP

NOTE : These caps do not meet US-EPA requirements.

65520-95D01-000
for 25 liter tank with a fuel-level gauge
Applicable Model DF8A-140A

FUEL CONNECTOR (ENGINE SIDE)

65720-986L0-000
Plastic
Applicable Model DF4A

FUEL CONNECTOR (TANK SIDE)

65740-95D01-000
Outer diameter: 13 mm, 1/4"NPT
Applicable Model DF8A/R-140A

SQUEEZE PUMP

65770-99J01-000
Small-in & Large-out
Applicable Model DF4A-6A

65770-90J11-000
Large-in & Large-out
Applicable Model DF8A-140A

65770-93J11-000
Large-in & Large-out
Applicable Model DF150-300AP

FUEL-HOSE COMPONENT

65700-94JD1-000
for 12 liter plastic tank to engine
Applicable Model DF4A-6A

65700-93J02-000
for fuel tank to engine
Applicable Model DF150-300AP

65700-87J15-000
for 25 liter plastic tank to engine
Applicable Model DF8A-20A

65700-90J14-000
for 25 liter plastic tank to engine
Applicable Model DF40A-140A

FUEL-HOSE SOCKET

65750-98505-000
Metal, inner diameter: 11.2 mm
Applicable Model DF4A-20A/R

65750-87J11-000
Plastic, inner diameter: 6.6 mm
Applicable Model DF4A/8A-30A

65750-95500-000
Metal, inner diameter: 13.0 mm
Applicable Model DF8A/R-140A

SQEEZE PUMP

(Meets US-EPA requirements.)

65770-94J02-000
Small-in & Large-out
Applicable Model DF4A/6A

65770-90J02-000
Large-in & Large-out
Applicable Model DF8A-25A/30A

65770-93J02-000
Large-in & Large-out
Applicable Model DF150-300AP

FUEL-HOSE COMPONENT

(Meets US-EPA requirements.)

65700-91J25-000
Applicable Model DF4A/6A

65700-87J25-000
Applicable Model DF8A-30A

65700-88L03-000
Applicable Model DF40A-60A

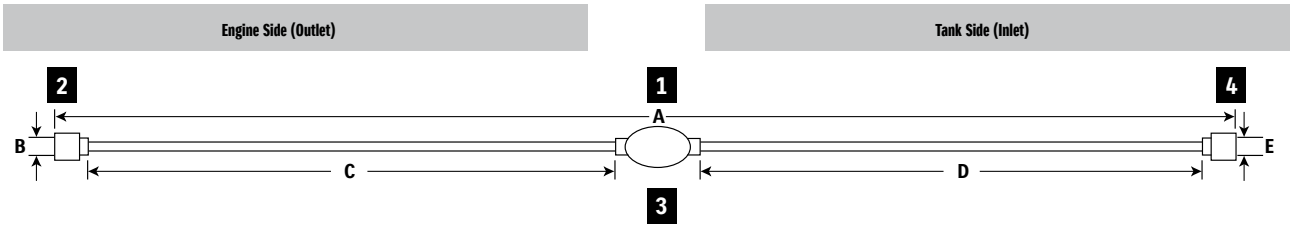

FUEL-HOSE COMPONENT Chart

1 FUEL-HOSE COMPONENT

2 FUEL-HOSE SOCKET Metal Plastic

3 SQUEEZE PUMP

4 FUEL-HOSE SOCKET Metal

1		2			-				3	-				4		
FUEL HOSE COMPONENT		SOCKET			HOSE					HOSE				SOCKET		
Part Number	A Length (mm)	Material	B I/D (mm)	Part Number	C Length (mm)		I/D (mm)	O/D (mm)	SQUEEZE PUMP	D Length (mm)		I/D (mm)	O/D (mm)	Material	E I/D (mm)	Part Number
65700-94JD1-000	1970	Plastic	6.6	65750-87J11-000	700	Large	7.3	12.5	65770-99J01-000	1100	Small	5.3	10.5	Metal	11.2	65750-98505-000
65700-93J02-000	2370	(no socket)	-	-	(no hose)	-	-	-	65770-93J11-000	2250	Large	9.0	14.0	(no socket)	-	-
65700-87J15-000	1970	Plastic	6.6	65750-87J11-000	700		7.3	12.5	65770-90J11-000	1100		7.3	12.5	Metal	13.0	65750-95500-000
65700-90J14-000	1250	(no socket)	-	-	(no hose)	-	-	-	65770-90J11-000	1100		7.3	12.5	Metal	13.0	65750-95500-000
65700-95D04-000	2550	Metal	13.0	65750-95500-000	300		7.3	12.5	65770-99J01-000	2090		5.3	10.5	Metal	11.2	65750-98505-000
65700-96362-000	2620	Metal	11.2	65750-98505-000	300		5.3	10.5	-	2250		7.3	12.5	Metal	13.0	65750-95500-000
65700-94416-000	3100	Metal	13.0	65750-95500-000	300		7.3	12.5	65770-90J11-000	2600		7.3	12.5	-	-	-
65700-94433-000	3100	Plastic	13.8	65750-94404-000	3000		7.3	12.5	-	-		-	-	-	-	-
65700-91J25-000	2000	Plastic	6.6	65750-87J11-000	700		7.3	12.5	65770-94J02-000	1100		5.3	10.5	Metal	11.2	65750-98505-000
65700-87J25-000	2000	Plastic	6.6	65750-87J11-000	700		7.3	12.5	65770-90J02-000	1100		7.3	12.5	Metal	13.0	65750-95500-000
65700-88L03-000	1280	(no socket)	-	-	(no hose)	-	-	-	65770-90J02-000	1100		7.3	12.5	Metal	13.0	65750-95500-000

WATER SEPARATOR / FUEL FILTER

65900-98J00-000

Applicable Model DF5A/DF8A-300AP

ELEMENT SET

65910-98J00-000

Applicable Model DF5A/DF8A-300AP

What is PROPELLER

Propeller selection is very important in the performance of your boat. Acceleration, speed, fuel efficiency, stability and engine RPM all are affected by the propeller selected. Operating requirements and conditions will also affect which design, style and pitch of propeller you may choose to meet your individual needs. The combination of boat, engine and appropriate propeller size may have already been tested by the boat manufacturer. **You may need to assist your customer with the process to determine the correct propeller for their application.**

Stainless Steel Propellers

Suzuki Stainless Steel Propellers offer higher performance and greater durability than aluminum propellers. The aggressive design of these propellers enhances the overall performance of your boat and the durability of the stainless steel construction will give you long term dependability. Your Suzuki Stainless Steel propeller is also fitted with a rubber cushion hub to help absorb vibration and shock should you strike a foreign object.

Propeller Sizing

When referring to propeller size, such as 3 x 13 x 18, the first number is the number of blade, the second number details the diameter of the propeller and the third number is the pitch of the propeller.
The pitch is the most significant number in the description. The diameter is usually predetermined by the propeller engineers and is based on the size and series of the engine.

Diameter

Diameter is considered to be the distance across an imaginary circle that is made when a propeller is rotated. Diameter is determined during the engineering process of designing a propeller and is usually based on requirements to meet the needs of engine size, gear case design, horsepower and speed.

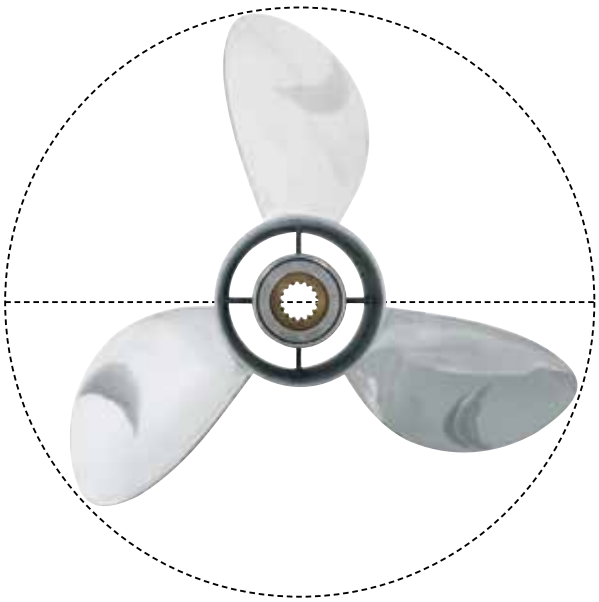

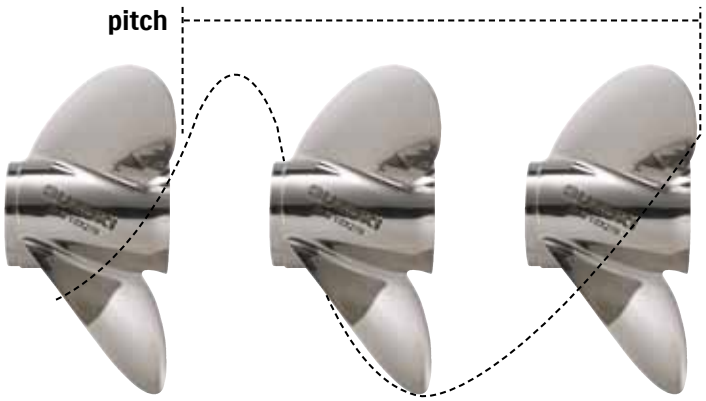

Pitch

Pitch is used to describe the theoretical distance that a propeller “cork screws” through the water in inches of forward travel. In theory, an 18" pitch propeller would move ahead 18" with each complete revolution of a propeller. There is always some percentage of inefficiency as water conditions, boat weight and propeller style are introduced into the performance equation. The lower the “slip factor,” the more efficiently the propeller will perform and the faster the speed at a given engine RPM. Lower pitches accelerate faster, but have a lower top end speed. Higher pitches have a slower acceleration, but may attain higher top speeds. An inch of pitch generally is equal to 150-200 engine RPM at wide open throttle (WOT). If pitch is increased by an inch, RPM will decrease by 150-200 RPM at WOT. If pitch is decreased by an inch, RPM will increase by 150-200 RPM at WOT. Always operate your boat/engine combination within the recommended RPM range guidelines as stated in your operator’s manual. Operating outside the recommended range can cause severe damage to your engine and may void the engine warranty.

Propeller Cup

Cup is used to reduce the slip and ventilation of the propeller. This will allow you to operate your engine at a higher transom mounting and allow you to use more trim for bow lift. The cup refers to the area along the trailing edge of the propeller blade that has an increased pitch in the last 1/2" of the blade surface and extends to the blade tip.

Rake

Rake is described as the angle, in degrees, that the propeller blades are mounted to the “barrel” of the propeller. The blades of a zero degree rake propeller are mounted perpendicular to the “barrel” of the propeller. The blades of a higher rake propeller angle more to the rear of the propeller. A propeller with a high rake design will hold the water on the blades longer during operation and will ventilate less at higher engine heights. High rake propellers will produce higher thrust that will help lift the bow of the boat more effectively.

HARDWARE FOR PROPELLER

Applicable Model	STOPPER	PROPELLER BUSH		HARDWARE KIT				
					SPACER	WASHER	NUT	COTTER PIN
DF2.5	57635-91JL0-000	58120-97JA0-000	Press-IN	N/A	-	-	58130-91JL0-000	09204-03003-000
DF4A/5A/6A	57635-97L00-000	58120-91JL0-000	Press-IN	N/A	-	-	58130-91JL0-000	09204-03003-000
DF8A/9.9A	57632-94J00-000	58120-89L00-000	Press-IN	N/A	-	09160-12066-000	09141-12005-000	09204-02004-000
DF9.9B/15A/20A	57632-94J00-000	58120-89L00-000	Press-IN	N/A	-	09160-12066-000	09141-12005-000	09204-02004-000
DF25A/30A	57632-91L00-000	58120-91L00-000	Press-IN	57630-96300-000	57633-96300-000	09160-14028-000	09141-14008-000	09204-03003-000
DF40A/50A/60A	57632-95320-000	58120-88L01-000	Press-IN	57630-94301-000	57633-94301-000	09160-18028-000	09141-18005-000	09204-03003-000
DF50AV/60AV	57635-90J01-000	58105-90J00-000	Press-IN	57630-90J00-000	57633-90J02-000	09160-18028-000	09141-18005-000	09204-03003-000
DF70A/80A/90A	57632-87L01-000	58105-90J00-000	Press-IN	57630-90J00-000	57633-90J02-000	09160-18028-000	09141-18005-000	09204-03003-000
DF100A/115A/140A	57635-92J01-000	58105-90J00-000	Press-IN	57630-90J00-000	57633-90J02-000	09160-18028-000	09141-18005-000	09204-03003-000
DF150-300AP	57632-93L01-000	58105-93J10-000	Press-IN	57630-92E00-000	57633-87D30-000	09160-18028-000	09141-18005-000	09204-03003-000

- 58105-90J00 is for **58100-87Lxx, 58100-90Jxx, 58200-92J4x~92J9x and 58200-92JAx~92JDx.**
- 58120-90J00 is for **58200-90J0x~90J3x and 58200-92J0x~92J3x.**
- 58105-93J00 is for **58200-96Jxx.**
- 58105-93J10 is for **58200-93Jxx, 58200-93Lxx and 58300-93Jxx.**

These bold letters indicate a proper part number in P34 & 35. Please refer to next pages.

Model	Type	Material	Blade	Diameter	Pitch	Rotation*	Description	Part number
DF2.5	A520	Aluminum	3	7 3/8	5 3/8	RR		58110-97JA0-019
DF4A	C601	Aluminum	3	7 1/2	6	RR		58110-91JL0-019
DF5A	C611	Aluminum	3	7 1/2	6 1/2	RR		58110-91JM0-019
DF6A	C701	Aluminum	3	7 1/2	7	RR		58110-91JN0-019
DF8A	M701	Aluminum	3	9 1/4	7	RR		58100-94JA1-000
DF9.9A	M821	Aluminum	3	9 1/4	8	RR	THICK	58100-90L40-019
	M901	Aluminum	3	9 1/4	9	RR		58100-89L20-019
	M911	Aluminum	3	9 1/4	9	RR	THICK	58100-90L50-019
	M1001	Aluminum	3	9 1/4	10	RR		58100-89L60-019
	M1011	Aluminum	3	9 1/4	10	RR	THICK	58100-90L21-019
	M1101	Aluminum	3	9 1/4	11	RR		58100-89L70-019
DF9.9B		Aluminum	4	10	5	RR	High thrust	58100-94JA1-000
DF15A		Aluminum	4	10	7	RR	High thrust	58100-94JB0-019
DF20A		Aluminum	3	9 1/4	7	RR		58100-89L00-019
		Aluminum	3	9 1/4	8	RR	THICK	58100-90L40-019
		Aluminum	3	9 1/4	9	RR		58100-89L20-019
		Aluminum	3	9 1/4	9	RR	THICK	58100-90L50-019
		Aluminum	3	9 1/4	10	RR		58100-89L60-019
		Aluminum	3	9 1/4	10	RR	THICK	58100-90L60-019
		Aluminum	3	9 1/4	11	RR		58100-89L70-019
		Aluminum	3	9 1/4	12	RR		58100-89L50-019
DF25A	P911	Aluminum	3	10 1/4	9	RR	THICK	58100-96372-019
DF30A	P1001	Aluminum	3	10 1/4	10	RR		58100-964L0-019
	P1011	Aluminum	3	10 1/4	10	RR	THICK	58100-96472-019
	P1101	Aluminum	3	10 1/4	11	RR		58100-96421-019
	P1201	Aluminum	3	10 1/4	12	RR		58100-91L20-019
	P1211	Aluminum	3	10 1/4	12	RR	THICK	58100-96482-019
	P1301	Aluminum	3	10 1/4	13	RR		58100-91L30-019
	P1311	Aluminum	3	10 1/4	13	RR	THICK	58100-96492-019
	P1401	Aluminum	3	10 1/4	14	RR		58100-95D01-019
	P1501	Aluminum	3	10 1/4	15	RR		58100-96462-019
DF40A	S900	Aluminum	3	11 1/2	9	RR		58100-88L03-019
DF50A	S1000	Aluminum	3	11 1/2	10	RR		58100-88L13-019
DF60A	S1100	Aluminum	3	11 1/2	11	RR		58100-88L23-019
	S1200	Aluminum	3	11 5/8	12	RR		58100-88LA0-019
	S1301	Aluminum	3	11 1/2	13	RR		58100-88LB0-019
	S1400	Aluminum	3	11 3/8	14	RR		58100-88L52-019
	S1500	Aluminum	3	11 1/4	15	RR		58100-88L62-019
	S1600	Aluminum	3	11 1/8	16	RR		58100-88L72-019
	S1700	Aluminum	3	11	17	RR		58100-88L83-019
	SS1600	Stainless	3	11 1/8	16	RR		58200-88L30-000
DF50AV		Aluminum	3	14	9	RR		58100-87LG1-019
DF60AV		Aluminum	3	14	11	RR		58100-87LH0-019
		Aluminum	3	13 3/4	12	RR		58100-87LJ0-019
		Aluminum	3	14	13	RR		58100-87LA0-019
		Aluminum	3	13 7/8	15	RR		58100-87LB0-019
		Aluminum	3	13 3/4	17	RR		58100-87LC0-019
DF70A		Aluminum	3	14	13	RR		58100-87LA0-019
DF80A		Aluminum	3	13 7/8	15	RR		58100-87LB0-019
DF90A		Aluminum	3	13 3/4	17	RR		58100-87LC0-019
		Aluminum	3	13 3/4	19	RR		58100-87LD0-019
		Aluminum	3	13 3/4	21	RR		58100-87LE0-019
		Aluminum	3	13 3/4	23	RR		58100-87LF0-019
		Aluminum	3	13 1/2	15	RR		58100-90JE0-019
		Aluminum	3	14	17	RR		58100-90JA0-019
		Aluminum	3	14	19	RR		58100-90JB0-019
		Aluminum	3	14	21	RR		58100-90JC0-019
		Aluminum	3	14	23	RR		58100-90JD0-019
		Stainless	3	13 7/8	15	RR		58200-92J40-000
		Stainless	3	13 7/8	17	RR		58200-92J50-000
		Stainless	3	13 7/8	19	RR		58200-92J60-000
		Stainless	3	13 7/8	21	RR		58200-92J70-000
		Stainless	3	13 7/8	23	RR		58200-92J80-000
		Stainless	3	13 7/8	25	RR		58200-92J90-000

* RR: Regular-Rotation model, CR:Counter-Rotation model

Model	Type	Material	Blade	Diameter	Pitch	Rotation*	Description	Part number
DF100A		Aluminum	3	13 1/2	15	RR		58100-90JE0-019
DF115A		Aluminum	3	14	17	RR		58100-90JA0-019
DF140A		Aluminum	3	14	19	RR		58100-90JB0-019
		Aluminum	3	14	21	RR		58100-90JC0-019
		Aluminum	3	14	23	RR		58100-90JD0-019
		Stainless	3	13 7/8	15	RR		58200-92J40-000
		Stainless	3	13 7/8	17	RR		58200-92J50-000
		Stainless	3	13 7/8	19	RR		58200-92J60-000
		Stainless	3	13 7/8	21	RR		58200-92J70-000
		Stainless	3	13 7/8	23	RR		58200-92J80-000
		Stainless	3	13 7/8	25	RR		58200-92J90-000
		Stainless	3	13 7/8	17	CR		58200-92JA0-000
		Stainless	3	13 7/8	19	CR		58200-92JB0-000
		Stainless	3	13 7/8	21	CR		58200-92JC0-000
		Stainless	3	13 7/8	23	CR		58200-92JD0-000
DF150		Stainless	3	16	15	RR		58200-93L80-000
DF175		Stainless	3	16	17	RR		58200-93L00-000
DF200		Stainless	3	16	18 1/2	RR		58200-93L10-000
DF225		Stainless	3	16	20	RR		58200-93L20-000
DF250		Stainless	3	16	21 1/2	RR		58200-93L30-000
DF250AP		Stainless	3	16	23	RR		58200-93L40-000
DF300AP		Stainless	3	16	24 1/2	RR		58200-93L50-000
		Stainless	3	16	26	RR		58200-93L60-000
		Stainless	3	16	27 1/2	RR		58200-93L70-000
		Stainless	3	16	17	CR		58200-93LE0-000
		Stainless	3	16	18 1/2	CR		58200-93LA0-000
		Stainless	3	16	20	CR		58200-93LB0-000
		Stainless	3	16	21 1/2	CR		58200-93LC0-000
		Stainless	3	16	23	CR		58200-93LD0-000
		Stainless	3	16	24 1/2	CR		58200-93LF0-000
		Stainless	3	16	26	CR		58200-93LG0-000
		Stainless	3	15 1/2	17	RR		58200-96J00-000
		Stainless	3	15 1/4	19	RR		58200-96J10-000
		Stainless	3	15	21	RR		58200-96J20-000
		Stainless	3	14 3/4	23	RR		58200-96J30-000
		Stainless	3	14 1/2	25	RR		58200-96J40-000
		Stainless	3	14 1/2	27	RR		58200-96J50-000
		Stainless	3	14 1/2	17	CR		58200-96JA0-000
		Stainless	3	15 1/4	19	CR		58200-96JB0-000
		Stainless	3	15	21	CR		58200-96JC0-000
		Stainless	3	14 3/4	23	CR		58200-96JD0-000
		Stainless	3	14 1/2	25	CR		58200-96JE0-000
		Stainless	3	14 1/2	27	CR		58200-96JF0-000
		Stainless	4	15 1/4	18	RR		58300-93J00-000
		Stainless	4	15 1/4	20	RR		58300-93J10-000
		Stainless	4	15 1/4	22	RR		58300-93J20-000
		Stainless	4	15 1/4	24	RR		58300-93J30-000
		Stainless	4	15 1/4	26	RR		58300-93J40-000
		Stainless	4	15 1/4	20	CR		58300-93JA0-000
		Stainless	4	15 1/4	22	CR		58300-93JB0-000
		Stainless	4	15 1/4	24	CR		58300-93JC0-000
		Stainless	4	15 1/4	26	CR		58300-93JD0-000

ANODE

ZINC ANODE for saltwater

55300-95500-000
Applicable Model DF8A/9.9A/40A-60A,

55320-95311-000
Applicable Model DF40A-60A/150-300AP

55125-91L00-000
Applicable Model DF25/R/Q

55321-90J01-000
Applicable Model DF50AV/60AV/100A-140A

ALUMINUM ANODE for brackish water, saltwater

55321-87J01-000
Applicable Model DF2.5-300AP,

55320-94900-000
Applicable Model DF60A-300AP

55321-95J00-000
Applicable Model DF2.5/DF4A/5A/6A

55321-93J01-000
Applicable Model DF150-300A

MAGNESIUM ANODE for freshwater

55321-87J10-000
Applicable Model DF4A-300AP,DT9.9A/15A

55321-94910-000
Applicable Model DF70A-300AP

ENGINE COVER

68110-89L00-000
Applicable Model DF8A-20A

68110-88L00-000
Applicable Model DF25/40A-60A

68110-87L00-000
Applicable Model DF70A-140A

68110-96J00-000
Applicable Model DF150T/Z-250T/Z

68110-98J00-000
Applicable Model DF250AP/300AP

990F0-87J00-010
Applicable Model DF40/50

990F0-99E00-010
Applicable Model DF60/70

990F0-87L00-010
Applicable Model DF70A/80A/90A

990F0-90J00-010
Applicable Model DF90/115

990F0-92J00-010
Applicable Model DF140

990F0-93J00-010
Applicable Model DF200/225/250

990F0-98J00-010
Applicable Model DF300

68110-96110-000
Applicable Model DF4A-20A

68110-94400-000
Applicable Model DF25

68110-94510-000
Applicable Model DF40A-60A

990F0-88L00-010
Applicable Model DF40A/DF50A/DF60A with new 4stroke logo

ALARM SYSTEM, COMPACT VERSION

990F0-ALARM-002
Applicable Model DF40-DF140 from 2005-
FD250 from 2004-2012
DF200 from 2004-
DF150-DF175 from 2006-
Easy to mount, Suzuki outboard engine dedicated plug & play connection. The various features of this waterproof remote controlled alarm system include e.g. system disarming by pin code, remote control, optical and acoustical signalization, engine stop function, cable cutting protection, and many more. Includes 1 micro magnetic contact.

MICRO MAGNETIC CONTACT FOR ALARM SYSTEM

990F0-ALARM-004
Additional waterproof micro magnetic contact for alarm system 990F0-ALARM-002. To be used e.g. for dash-board driving console and access point protection (sliding doors, windows).

FLUSH-HOSE ATTACHMENT

55181-95200-000
Applicable Model DF4A-6A/40A-60A

17917-87L00-000
Applicable Model DF8A-300A

BATTERY CHARGER

990E0-OPTIM-CAR
OptiMate 6, versatile battery charger, maintainer and tester. Recommended for STS/AGM/MF/GEL and spiral cell batteries from 15 Ah to 240 Ah.

SUZUKI APPROVED GENUINE OIL by MOTUL

These products are supplied directly by MOTUL.
Please note that these oils are not available in some countries.
Please contact the local distributor of MOTUL.
Suzuki and MOTUL have been in partnership in MotoGP since 1988.
Extending this trusted relationship led to the development of new Suzuki Marine Oils.
These ranges of oils have excellent oxidation stability and provide outstanding rust protection under severe operating conditions.

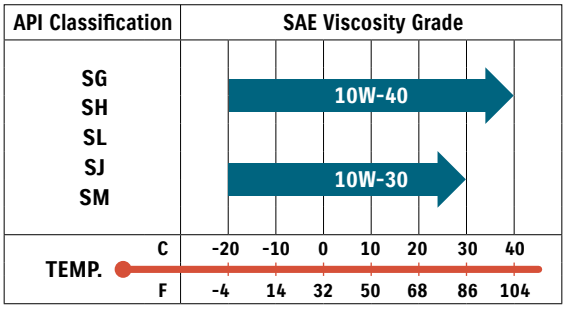

99000-79N12-M01
SAE 10W-30 semi synthetic
4 x 5 litre FCW

990F0-79N12-M00
SAE 10W-30 semi synthetic
12 x 1 litre FCW

99000-79N12-M02
SAE 10W-30 semi synthetic
60 litre FCW

99000-79N12-M09
SAE 10W-30 semi synthetic
208 litre FCW

99000-79N12-M04
SAE 10W-40 semi synthetic
4 x 5 litre FCW

990F0-79N12-M03
SAE 10W-40 semi synthetic
12 x 1 litre FCW

99000-79N12-M05
SAE 10W-40 semi synthetic
60 litre FCW

99000-79N12-M10
SAE 10W-40 semi synthetic
208 litre FCW

99000-79N12-M08
"S" MARINE GEAR OIL SAE90
Packaging unit 12 x 1 litre

HYDRAULIC FLUID

990F0-22541-001
Dexron III for all Suzuki 2 and 4 stroke outboard powertrim/tilt systems
1 litre

INHIBITOR

997SO-KONS3-001
Multi-purpose fluid lubricant: unblocks, lubricates and protects all metal parts from corrosion by depositing a protective film.
400 ml

FUEL SYSTEM CLEAN

990F0-FSCLE-002
Cleaner specially designed for the fuel systems of gasoline engines. Reinforced action on valves, carburetors, injectors and combustion chambers.
12 x 300 ml

GEAR OIL

99000-79N12-M07
SAE 90, API GL-5
Packaging unit 24 x 0.35 litre

GREASE

99000-25011-000
SUPER GREASE-A
450 grams (15.8 oz) for Crank oil seal

99000-25350-000
WATER RESISTANT GREASE EP2
450 grams (8.8 oz)

PTT FLUID

99000-22810-000
AT FLUID 5D06 1L
1 liter

LIQUID GASKET

99000-31140-THR
1207B (BLACK)
100 grams (3.4 oz)

THREAD LOCK

99000-32130-000
1333B (RED)
50 grams (1.7 oz)

PAINT

NEW

99000-10202-0EP
Touch-up paint set black
12 ml

997SO-41004-CLR
AE clear coat
400 ml

997SO-41004-0EP
AE shadow black metallic
400 ml

997SO-41004-0ED
AE california gray metallic
400 ml

SUZUKI MAINTENANCE KITS

SUZUKI highly recommends to replace your outboard motor with Maintenance Kits every 100 hours or 1 year, whichever occurs first.

ALL LINEUP For 4 STROKE Outboard Motor

MODEL / YEAR	KIT PART NUMBER	PART NUMBER	PART NAME	QTY
DF2/2.5 ('06~'11)	17400-97820	17461-97JM0-000	IMPELLER, WATER PUMP	1
		09482-00406-000	SPARK PLUG, CR6HSA	1
		09204-02001-000	COTTER PIN	1
		09168-10022-000	GASKET, 10 X 17 X 1.5	1
		59178-97J00-000	GASKET, DRAIN PLUG	2
		55321-87J01-000	ANODE, PROTECTION	1
		09280-33005-000	O RING	1
		09202-02006-000	PIN (2.9 X 14)	1
		17471-97J00-000	PANEL, PUMP CASE UNDER	1
		17472-97J00-000	GASKET, PUMP CASE PANEL	1
DF2/2.5 ('12~)	17400-97810	17461-97JM0-000	IMPELLER,WATER PUMP	1
		09482-00406-000	SPARK PLUG, CR6HSA	1
		09204-03003-000	COTTER PIN, D: 3.6, L: 25	1
		09168-10022-000	GASKET, 10 X 17 X 1.5	1
		59178-97J00-000	GASKET, DRAIN PLUG	2
		55321-87J01-000	ANODE, PROTECTION	1
		09280-33005-000	O RING	1
		09202-02006-000	PIN	1
		17471-97JL0-000	UNDER PANEL	1
		17472-97JL0-000	GASKET	1
DF4/5/6 ('02~'10)	17400-91860	17400-986L1-000	KIT, WATER PUMP REPAIR	1
		09204-03003-000	COTTER PIN, D: 3.6, L: 25	1
		09482-00299-000	SPARK PLUG, BPR6ES	1
		09168-10022-000	GASKET, 10 X 17 X 1.5	3
		55321-87J01-000	ANODE, PROTECTION	2
		17412-91JL0-000	PANEL, WATER PUMP CASE UPR	1
		17413-91JL0-000	SLEEVE, WATER PUMP CASE	1
		15410-98500-000	FUEL, FILTER	1
DF4/5/6 ('11~'16)	17400-91830	17400-986L1-000	KIT, WATER PUMP REPAIR	1
		09204-03003-000	COTTER PIN, D: 3.6, L: 25	1
		09482-00L04-000	SPARK PLUG, CPR6EA-9	1
		09168-10022-000	GASKET, 10 X 17 X 1.5	3
		55321-87J01-000	ANODE, PROTECTION	2
		17412-91JL0-000	PANEL	1
		17413-91JL0-000	SLEEVE	1
		15410-98500-000	FUEL, FILTER	1
NEW DF4A/5A/6A P01 DF4A/6A P03 ('17~)	17400-91890	09168-12017-000	GASKET (12 X 17 X 1)	1
		09204-03003-000	PIN	1
		09280-39001-000	O RING (D: 2, ID: 38.5)	1
		09420-03002-000	KEY	1
		09482-00L04-000	PLUG, SPARK (CPR6EA-9)	1
		16510B16H11N000	FILTER, ENGINE OIL	1
		17412-91JL0-000	PANEL, WATER PUMP CASE UPR	1
		17413-91JL0-000	SLEEVE, WATER PUMP CASE	1
		17461-985M0-000	IMPELLER, WATER PUMP	1
		17471-98610-000	PANEL, PUMP CASE UNDER	1
		17472-91J00-000	GASKET, PUMP CASE PANEL	1
		44330-13H00-000	FILTER, FUEL	1
		55321-87J01-000	ANODE, PROTECTION	1
		55321-95J00-000	ANODE, PROTECTION	1
		59178-97J00-000	GASKET, DRAIN PLUG	2
DF8A/9.9A ('10~)	17400-99840	15410-98500-000	FILTER, FUEL	1
		16510-45H10-000	FILTER ASSY, ENG OIL	1
		09204-02004-000	COTTER PIN	1
		09280-54001-000	O RING (D: 2.4, ID: 52.6)	1
		09280-13004-000	O RING (D: 1.9, ID: 13)	1
		09168-12017-000	GASKET, 12 X 17 X 1	1
		59178-97J00-000	GASKET, DRAIN PLUG	2
		55321-87J01-000	ANODE, PROTECTION	2
		09280-22019-000	O RING, D: 1.9, ID: 21.8	1
		09482-00528-000	SPARK PLUG, CR6E	2
		17400-99J01-000	KIT, WATER PUMP REPAIR	1
		17413-94J00-000	SLEEVE	1
DF9.9/15 ('11~'13)	17400-94810	17400-94J00-000	KIT, WATER PUMP REPAIR	1
		09204-02004-000	COTTER PIN	1
		09482-00L04-000	SPARK PLUG, CPR6EA-9	2
		16510-45H10-000	FILTER ASSY, ENG OIL	1
		09280-10013-000	O RING (D: 2.4, ID: 9.6)	1
		55321-99E00-000	ANODE, PROTECTION	1
		55321-90L00-000	ZINC, PROTECTION	1
		09168-12017-000	GASKET, 12 X 17 X 1	1
		09168-10022-000	GASKET, 10 X 17 X 1.5	2
		17413-94J00-000	SLEEVE, WATER PUMP CASE	1
		15410-98500-000	FUEL, FILTER	1
DF9.9B/15A/20A ('13~)	17400-89810	17400-99J01-000	KIT, WATER PUMP REPAIR	1
		09204-02004-000	COTTER PIN	1
		09482-00L04-000	SPARK PLUG, CPR6EA-9	2
		16510-45H10-000	FILTER ASSY, ENG OIL	1
		09280-13004-000	O RING (D: 1.9, ID 13)	1
		09280-54001-000	O RING (D: 2.4, ID: 52.6)	1
		55321-87J01-000	ANODE, PROTECTION	2
		09280-22019-000	O RING, D: 1.9, ID: 21.8	1
		09168-12017-000	GASKET, 12 X 17 X 1	1
		59178-97J00-000	GASKET, DRAIN PLUG	2
		17413-94J00-000	SLEEVE, WATER PUMP CASE	1
		15410-87L00-000	FUEL, FILTER	1

MODEL / YEAR	KIT PART NUMBER	PART NUMBER	PART NAME	QTY
DF20/25 V2 ('06~)	17400-95870	17400-95J02-000	KIT,WATER PUMP REPAIR	1
		16510-87J00-000	FILTER ASSY, OIL	1
		09482-00427-000	SPARK PLUG, BKR6E	2
		09204-03003-000	COTTER PIN, D: 3.6, L: 25	1
		09168-10022-000	GASKET, 10 X 17 X 1.5	2
		09168-12012-000	GASKET, 12.5 X 20 X 2.5	1
		55321-95J00-000	ANODE, PROTECTION	2
		55321-87J01-000	ANODE, PROTECTION	5
		09280-10013-000	O RING D: 2.4, ID: 9.6	2
		09280-22019-000	O RING D: 1.9, ID: 21.8	1
		17413-95J00-000	SLEEVE	1
		15410-87J30-000	FUEL, FILTER	1
DF25/30 ('01~'10)	17400-89820	17400-96353-000	KIT, WATER PUMP REPAIR	1
		16510-87J00-000	FILTER ASSY, OIL	1
		09482-00446-000	SPARK PLUG, DCPR6E	3
		09204-03003-000	COTTER PIN, D: 3.6, L: 25	1
		09168-10022-000	GASKET, 10 X 17 X 1.5	2
		09168-12012-000	GASKET, 12.5 X 20 X 2.5	1
		55321-87J01-000	ANODE, PROTECTION	1
		11265-87E10-000	GASKET, PROTECTION COVER	1
		15410-87J10-000	FUEL, FILTER	1
DF25A/30A ('15~)	17400-94820	17400-94L00-000	KIT, WATER PUMP REPAIR	1
		09204-03003-000	COTTER PIN (D: 3.6, L: 25)	1
		09482-00L04-000	SPARK PLUG (CPR6EA-9)	3
		16510-87JL0-000	FILTER ASSY, OIL	1
		55321-87J01-000	ANODE, PROTECTION	5
		09280-22019-000	O RING (D: 1.9, ID: 21.8)	1
		09168-12017-000	GASKET (12 X 17 X 1)	1
		59178-97J00-000	GASKET, DRAIN PLUG	2
		17413-94L00-000	SLEEVE, WATER PUMP CASE	1
		15410-87L00-000	FUEL, FILTER	1
DF40/50 ('06LATE~'10)	17400-87820	17400-96353-000	KIT, WATER PUMP REPAIR	1
		16510-87J00-000	FILTER ASSY, OIL	1
		09482-00446-000	SPARK PLUG, DCPR6E	3
		09204-03003-000	COTTER PIN, D: 3.6, L: 25	1
		09168-10022-000	GASKET, 10 X 17 X 1.5	2
		09168-12012-000	GASKET, 12.5 X 20 X 2.5	1
		55321-87J01-000	ANODE, PROTECTION	2
		09280-22019-000	O RING, D: 1.9, ID: 21.8	2
		15410-87J30-000	FILTER, FUEL	1
DF40A/50A/60A ('10~)	17400-88810	17400-88L00-000	KIT,WATER PUMP REPAIR	1
		09204-03003-000	COTTER PIN, D: 3.6, L: 25	1
		16510-87J00-000	FILTER ASSY, OIL	1
		09482-00446-000	SPARK PLUG, DCPR6E	3
		09168-12012-000	GASKET, 12.5 X 20 X2.5	1
		09168-10022-000	GASKET, 10 X 17 X 1.5	2
		55321-87J01-000	ANODE, PROTECTION	3
		09280-22019-000	O RING, D: 1.9, ID: 21.8	2
		15410-88L00-000	FILTER COMP, FUEL	1
DF50AV/60AV ('14~)	17400-88820	17400-99E10-000	KIT, WATER PUMP REPAIR	1
		09204-03003-000	COTTER PIN, D: 3.6, L: 25	1
		16510-87J00-000	FILTER ASSY, OIL	1
		09482-00446-000	SPARK PLUG, DCPR6E	3
		09168-12012-000	GASKET, 12.5 X 20 X 2.5	1
		09168-10022-000	GASKET, 10 X 17 X 1.5	2
		55321-87J01-000	ANODE, PROTECTION	3
		09280-22019-000	O RING, D: 1.9, ID: 21.8	2
		15410-88L00-000	FILTER COMP, FUEL	1
DF60 ('09LATE~'09END)	17400-99850	17400-99E10-000	KIT, WATER PUMP REPAIR	1
		16510-87J00-000	FILTER ASSY, OIL	1
		09482-00299-000	SPARK PLUG, BPR6ES	4
		09204-03003-000	COTTER PIN, D: 3.6, L: 25	1
		09168-10022-000	GASKET, 10 X 17 X 1.5	2
		09168-12012-000	GASKET, 12.5 X 20 X 2.5	1
		55321-87J01-000	ANODE, PROTECTION	1
		11265-87E10-000	GASKET, PROTECTION COVER	1
		17416-99E10-000	SEALING, WATER PUMP CASE	1
		17413-99E11-000	SLEEVE, WATER PUMP CASE	1
		15410-87J30-000	FILTER, FUEL	1
DF60/70 ('07)	17400-99870	17400-87E04-000	KIT, WATER PUMP REPAIR	1
		16510-87J00-000	FILTER ASSY, OIL	1
		09482-00299-000	SPARK PLUG, BPR6ES	4
		09204-03003-000	COTTER PIN, D: 3.6, L: 25	1
		09168-10022-000	GASKET, 10 X 17 X 1.5	2
		09168-12012-000	GASKET, 12.5 X 20 X 2.5	1
		55321-87J01-000	ANODE, PROTECTION	1
		11265-87E10-000	GASKET, PROTECTION COVER	1
		15410-87J30-000	FILTER, FUEL	1
DF60/70 ('08~'09EARLY)	17400-99860	17400-99E01-000	KIT, WATER PUMP REPAIR	1
		16510-87J00-000	FILTER ASSY, OIL	1
		09482-00299-000	SPARK PLUG, BPR6ES	4
		09204-03003-000	COTTER PIN, D: 3.6, L: 25	1
		09168-10022-000	GASKET, 10 X 17 X 1.5	2
		09168-12012-000	GASKET, 12.5 X 20 X 2.5	1
		55321-87J01-000	ANODE, PROTECTION	1
		11265-87E10-000	GASKET, PROTECTION COVER	1
		17416-99E00-000	SEALING, WATER PUMP CASE NO1	1
		17413-99E11-000	SLEEVE, WATER PUMP CASE	1
		17417-99E00-000	SEALING, WATER PUMP CASE NO2	1
		15410-87J30-000	FILTER, FUEL	1

MODEL / YEAR	KIT PART NUMBER	PART NUMBER	PART NAME	QTY
DF70A/80A/90A ('09~)	17400-87810	17400-87L01-000	KIT, WATER PUMP REPAIR	1
		16510-61A31-000	FILTER ASSY, OIL (WAKO)	1
		09482-00446-000	SPARK PLUG, DCPR6E	4
		09168-12012-000	GASKET, 12.5 X 20 X 2.5	1
		09168-10034-000	GASKET, 9.5 X 16.5 X 2	2
		55321-87J01-000	ANODE, PROTECTION	3
		09204-03003-000	COTTER PIN, D: 3.6, L: 25	1
		09280-22019-000	O RING, D: 1.9, ID: 21.8	3
		09420-04009-000	KEY, WATER PUMP	1
		15410-87L00-000	FUEL, FILTER	1
DF100/115 ('10~'12)	17400-92840	17400-92J21-000	KIT, WATER PUMP REPAIR	1
		16510-61A31-000	FILTER ASSY, OIL	1
		09482-00427-000	SPARK PLUG, BKR6E	4
		09204-03003-000	COTTER PIN, D: 3.6, L: 25	1
		09168-10022-000	GASKET, 10 X 17 X 1.5	2
		09168-12012-000	GASKET, 12.5 X 20 X 2.5	1
		55321-87J01-000	ANODE, PROTECTION	4
		11265-87E10-000	GASKET, PROTECTION COVER	2
		09280-22019-000	O RING, D: 1.9, ID: 21.8	2
		09420-05009-000	KEY WATER PUMP	1
		15410-87J30-000	FILTER, FUEL	1
DF100A/115A/140A ('13~)	17400-92821	17400-92J21-000	KIT, WATER PUMP REPAIR	1
		16510-61A31-000	FILTER ASSY, OIL (WAKO)	1
		09482-00427-000	SPARK PLUG, BKR6E	4
		09204-03003-000	COTTER PIN, D: 3.6, L: 25	1
		09168-10022-000	GASKET, 10 X 17 X 1.5	2
		09168-12012-000	GASKET, 12.5 X 20 X 2.5	1
		55321-87J01-000	ANODE, PROTECTION	4
		11265-87E10-000	GASKET, PROTECTION COVER	2
		09280-22019-000	O RING, D: 1.9, ID: 21.8	2
		09420-05009-000	KEY, WATER PUMP	1
		15412-92J00-000	ELEMENT, FUEL FILTER	1
DF140 ('10~'12)	17400-92850	17400-92J21-000	KIT, WATER PUMP REPAIR	1
		16510-61A31-000	FILTER ASSY, OIL	1
		09482-00427-000	SPARK PLUG, BKR6E	4
		09204-03003-000	COTTER PIN, D: 3.6, L: 25	1
		09168-10022-000	GASKET, 10 X 17 X 1.5	2
		09168-12012-000	GASKET, 12.5 X 20 X 2.5	1
		55321-87J01-000	ANODE, PROTECTION	4
		11265-87E10-000	GASKET, PROTECTION COVER	2
		09280-22019-000	O RING, D: 1.9, ID: 21.8	2
		09420-05009-000	KEY, WATER PUMP	1
		15410-87J30-000	FILTER, FUEL	1
		16621-73G00-000	GASKET, OIL COOLER	1
		09280-56005-000	O RING (D: 3.53, ID: 56.74)	1
		09280-60007-000	O RING (D: 3.5, ID: 59.6)	1
		09280-70005-000	O RING (D: 3.1, ID: 69.4)	1
DF150/175 ('06~)	17400-96821	17400-96J02-000	KIT,WATER PUMP REPAIR	1
		16510-96J00-000	FILTER ASSY,OIL	1
		09482-00427-000	SPARK PLUG, BKR6E	4
		09204-03003-000	COTTER PIN, D: 3.6, L: 25	1
		09168-10034-000	GASKET, 9.5 X 16.5 X 2	2
		09168-12012-000	GASKET, 12.5 X 20 X 2.5	1
		55321-87J01-000	ANODE, PROTECTION	6
		09280-22019-000	O RING, D: 1.9, ID: 21.8	5
		17413-96J01-000	SLEEVE, WATER PUMP CASE	1
		15410-96J00-000	FUEL, FILTER	1
DF200/225/250 ('11~)	17400-93851	17400-93J02-000	KIT, WATER PUMP REPAIR	1
		16510-96J00-000	FILTER ASSY,OIL	1
		09482-00427-000	SPARK PLUG, BKR6E	6
		09204-03003-000	COTTER PIN, D: 3.6, L: 25	1
		09168-10034-000	GASKET, 9.5 X 16.5 X 2	2
		09168-12012-000	GASKET, 12.5 X 20 X 2.5	1
		55321-87J01-000	ANODE, PROTECTION	7
		09280-22019-000	O RING, D: 1.9, ID: 21.8	7
		55320-94900-000	ANODE SET, CLAMP BRACKET	1
		17413-93J02-000	SLEEVE, WATER PUMP CASE	1
		15412-93J10-000	ELEMENT, FUEL FILTER	1
DF250A/300(A)/250S ('11~)	17400-98861	17400-98J01-000	KIT, WATER PUMP REPAIR	1
		16510-96J00-000	FILTER ASSY, OIL	1
		09482-00427-000	SPARK PLUG, BKR6E	6
		09204-03003-000	COTTER PIN, D: 3.6, L: 25	1
		09168-10034-000	GASKET, 9.5 X 16.5 X 2	2
		09168-12012-000	GASKET, 12.5 X 20 X 2.5	1
		55321-87J01-000	ANODE, PROTECTION	8
		09280-22019-000	O RING, D: 1.9, ID: 21.8	7
		17413-93J02-000	SLEEVE, WATER PUMP CASE	1
		55320-94900-000	ANODE SET, CLAMP BRACKET	1
		15412-93J10-000	ELEMENT, FUEL FILTER	1

APPLICATION CHART

ITEM	PAGE	DF300AP	DF250AP	DF200AP	DF175AP	DF150AP	DF250			DF225		DF200		DF200A		DF175		DF150			DF140A		DF115A			DF100A	DF90A	DF80A
		DF300AP	DF250AP	DF200AP	DF175AP	DF150AP																				DF100AT	DF90AT	DF80AT
SUZUKI MULTI-FUNCTION GAUGE	P.06	○	○	○	○	○	○	○	○	○	○	○	○	○	○	○	○	○	○	○	○	○	○	○	○	○	○	○
SUZUKI KEYLESS START SYSTEM	P.20	○	○	○	○	○								○	○						○	○	○	○	○	○	○	○
ANALOGUE INSTRUMENT	P.24-25						○	○	○	○	○	○	○	○	○	○	○	○	○	○	○	○	○	○	○	○	○	○
ELECTRONIC THROTTLE AND SHIFT SYSTEM	P.26-33																											
ELECTRONIC REMOTE CONTROL KIT	P.26-30	○	○	○	○	○																						
ELECTRONIC REMOTE CONTROL BOX	P.27-30	○	○	○	○	○																						
BATTERY LEAD	P.35	○	○	○	○	○																						
MECHANICAL REMOTE CONTROL SYSTEM	P.36-39																											
MECHANICAL REMOTE CONTROL KIT	P.36-39						○	○	○	○	○	○	○	○	○	○	○	○	○	○	○	○	○	○	○	○	○	○
MECHANICAL REMOTE CONTROL BOX	P.40						○	○	○	○	○	○	○	○	○	○	○	○	○	○	○	○	○	○	○	○	○	○
BATTERY LEAD	P.40						○	○	○	○	○	○	○	○	○	○	○	○	○	○	○	○	○	○	○	○	○	○
REMOTE-CONTROL CABLE	P.41						○	○	○	○	○	○	○	○	○	○	○	○	○	○	○	○	○	○	○	○	○	○
REMOTE-CONTROL ATTACHING KIT	P.41																											
STEERING	P.42-43																											
TILLER HANDLE KIT	P.42																						○		○	○	○	
DUAL-ENGINE TIE-BAR	P.43						○	○	○	○	○	○	○	○	○	○	○	○	○	○	○	○	○	○	○			
STEERING EXTENSION KIT	P.43						○	○	○	○	○	○	○	○	○	○	○	○	○	○	○	○	○	○	○			
STEERING-BRACKET ATTACHIMENT	P.43																											
DRAG-LINK KIT	P.43						○	○	○	○	○	○	○	○	○	○	○	○	○	○	○	○	○	○	○	○	○	
ELECTRICAL PARTS	P.44-45																											
COUNTER SELECT CONNECTOR	P.31	○	○	○	○	○																						
BATTERY ISOLATOR LEAD SET	P.45	○	○	○	○	○								○	○	○	○	○	○	○								
ELECTRIC STARTER KIT (ONLY FOR MZ type)	P.45																											
BATTERY CHARGING KIT (ONLY FOR MZ type)	P.45																											
RECTIFIER SET (ONLY FOR MZ type)	P.44																											
RECEPTACLE KIT (ONLY FOR MZ type)	P.44																											
ANODE	P.52	○	○	○	○	○	○	○	○	○	○	○	○	○	○	○	○	○	○	○	○	○	○	○	○	○	○	○
FUEL SYSTEM	P.46-47	○	○	○	○	○	○	○	○	○	○	○	○	○	○	○	○	○	○	○	○	○	○	○	○	○	○	○

ITEM	PAGE	DF90A	DF70A	DF60A		DF60AV	DF50A		DF50AV	DF40A		DF30A			DF25A			DF20A		DF15A		DF9.9B		DF9.9A	DF8A	DF6A	DF5A	DF4A	DF2.5
		DF90ATH	DF70ATH	DF60ATH	DF60AQH	DF60AVTH	DF50ATH	DF50AQH	DF50AVTH	DF40ATH	DF40AQH	DF30A	DF30ATH	DF30AQH	DF25A	DF25ATH	DF25AQH	DF20A	DF20ATH	DF15A	DF15ATH	DF9.9B	DF9.9BTH	DF9.9A	DF8A	DF6A	DF5A	DF4A	DF2.5
SUZUKI MULTI-FUNCTION GAUGE	P.06																												
SUZUKI KEYLESS START SYSTEM	P.20																												
ANALOGUE INSTRUMENT	P.24-25																												
ELECTRONIC THROTTLE AND SHIFT SYSTEM	P.26-33																												
ELECTRONIC REMOTE CONTROL KIT	P.26-30																												
ELECTRONIC REMOTE CONTROL BOX	P.27-30																												
BATTERY LEAD	P.35																												
MECHANICAL REMOTE CONTROL SYSTEM	P.36-39																												
MECHANICAL REMOTE CONTROL KIT	P.36-39																												
MECHANICAL REMOTE CONTROL BOX	P.40																												
BATTERY LEAD	P.40	○	○																										
REMOTE-CONTROL CABLE	P.41																												
REMOTE-CONTROL ATTACHING KIT	P.41											○	○	○	○	○	○	○	○	○	○	○	○	○	○	○	○	○	
STEERING	P.42-43																												
TILLER HANDLE KIT	P.42																												
DUAL-ENGINE TIE-BAR	P.43																												
STEERING EXTENSION KIT	P.43																												
STEERING-BRACKET ATTACHIMENT	P.43	○	○	○	○	○	○	○	○	○	○	○	○	○	○	○	○	○	○	○	○	○	○	○	○	○			
DRAG-LINK KIT	P.43																												
ELECTRICAL PARTS	P.44-45																												
COUNTER SELECT CONNECTOR	P.31																												
BATTERY ISOLATOR LEAD SET	P.45																												
ELECTRIC STARTER KIT (ONLY FOR MZ type)	P.45											○		○	○		○	○		○		○		○	○				
BATTERY CHARGING KIT (ONLY FOR MZ type)	P.45											○		○	○		○	○		○		○		○	○	○	○	○	
RECTIFIER SET (ONLY FOR MZ type)	P.44											○		○	○		○	○		○		○		○	○	○	○	○	
RECEPTACLE KIT (ONLY FOR MZ type)	P.44											○		○	○		○	○		○		○		○	○	○	○	○	
ANODE	P.52	○	○	○	○	○	○	○	○	○	○	○	○	○	○	○	○	○	○	○	○	○	○	○	○	○	○	○	○
FUEL SYSTEM	P.46-47	○	○	○	○	○	○	○	○	○	○	○	○	○	○	○	○	○	○	○	○	○	○	○	○	○	○	○	○

DF70A	DF60A	DF60AV	DF50A	DF50AV	DF40A	DF40AS	DF30A	DF25A		DF20A		DF15A	DF9.9B		DF9.9A	DF8A
DF70AT	DF60AT	DF60AV	DF50AT	DF50AV	DF40AT	DF40AST	DF30AT	DF25AR	DF25AT	DF20AR	DF20AT	DF15AR	DF9.9BR	DF9.9BT	DF9.9AR	DF8AR
○	○	○	○	○	○	○	○	○	○	○	○	○	○	○		
○																
○	○	○	○	○	○	○	○	○	○	○	○	○	○	○	○	○
○	○	○	○	○	○	○	○		○		○			○		
○	○	○	○	○	○	○	○	○	○	○	○	○	○	○	○	○
○																
○	○	○	○	○	○	○	○	○	○	○	○	○	○	○	○	○
○	○	○	○	○	○											
○	○	○	○	○	○	○	○	○	○	○	○	○	○	○	○	○
								○		○		○	○		○	○
								○		○		○	○		○	○
								○		○		○	○		○	○
								○		○		○	○		○	○
○	○	○	○	○	○	○	○	○	○	○	○	○	○	○	○	○
○	○	○	○	○	○	○	○	○	○	○	○	○	○	○	○	○

MESH CAP

High breathability cap will be good for summer season.
Front: Cotton 100 % Back: Polyester 100%

99000-990X7-MY1

KNIT BEANIE

Knit cap with "SUZUKI MARINE" logo. Easy to carry in compact size. It is a "Must-item" for the winter season.
Acryl 100 %

99000-990X7-MY4

CAP

Standard cap with "SUZUKI MARINE" logo. Simple design can be used for any occasion.
Cotton 100 %

99000-990X7-MY2

SUN VISOR

Sun visor with “SUZUKI MARINE” logo. Protect your face from strong sunshine.
Cotton 100 %

99000-990X7-MY3

CAP & NECK CAPE

Functional cap with neck cape protects you from sunshine in the front and back side. Also can be used as normal cap, when you take off the neck cape.
Nylon: 100 %

99000-990X7-MY5

FACE GUARD

Protect your face from heavy rain and wind on the boat.
Soft material on the part of the mouth and wind-protection -fleece material on the whole neck part are used. It gives you comfort and moisture-retaining property.
Outer layer: Polyester 100 %
Middle layer: Polyurethane 100 %
Inner layer: Polyester 100 %

99000-990X7-MY6

LIGHT GLOVES

Functional and useful glove for working on the boat.
Mesh material for quick drying is used to the back of the hand.
Anti-slip Suede material and adjustable buckle is used to the palm part.
Back: Polyester 100 %
Palm: Polyurethane 100 %

M: 99000-990X7-MLM
L: 99000-990X7-MLL
XL: 99000-990X7-MLX

BEAR DOLL

A cute bear doll wearing “SUZUKI MARINE" T-shirt made from soft material. It gives you a brief moment of healing. We express kindness and sincerity for the customer with this item.
Polyester 100 %

99000-990X7-MY8

TOWEL BLUE

Size: 140 cm / 70 cm
Cotton 100 %, 450 gr./m²

990F0-BLTW1-000

KEY RING

Signal yellow floatable key ring, neoprene outer material, useful for max. 3 standard keys (max. 40 gr. total).

990F0-SMFK1-000

TEAM BLUE

990F0-BLMJ2-size

TEAM JACKET BLUE WATERPROOF

Blue waterproof and breathable membrane jacket, embroidered Suzuki logos front and rear, ventilation-zips, detachable hood, zip pockets, outer material soft-shell 96 % polyester, 4 % elastane, lining: mesh 100 % polyester.

Size S/M/L/XL/XXL/3XL

990F0-BLBE2-000

TEAM BEANIE BLUE

Blue team beanie with soft fleece lining, outer material 100 % acrylic, inner fleece lining 100 % polyester.

ONE SIZE FITS ALL

990F0-BLRJ2-size

TEAM RAIN JACKET BLUE WATERPROOF (RAINBREAKER)

Blue lightweight waterproof rain jacket, small packaging, including pouch with straps integrated in reversible outer pocket, printed Suzuki logos front and rear, 100 % polyamide.

Size S/M/L/XL/XXL/3XL

990F0-BLQJ2-size

TEAM QUILTED JACKET BLUE

Functional quilted jacket, warm, lightweight and small packaging, printed Suzuki logos front and rear, zipped pockets, outer material 100 % polyamide, inner lining 100 % polyamide, padding 100 % polyester.

Size XS/S/M/L/XL/XXL/3XL

990F0-BLHD2-size

TEAM HOODIE BLUE

Blue full-zip team hoodie with embroidered Suzuki logos on front and rear, drawstring hood, 2 outer pockets, 80 % cotton, 20 % polyester.

Size S/M/L/XL/XXL/3XL

TEAM BLACK

990F0-BKMJ2-size

TEAM JACKET BLACK WATERPROOF

Black waterproof and breathable membrane jacket with red details, embroidered Suzuki logos front and rear, ventilation-zips, detachable hood, zip pockets, outer material 100 % polyamide, 5 % elastane, lining: mesh 100 % polyester.

Size S/M/L/XL/XXL/3XL

990F0-BKBW2-size

TEAM QUILTED BODYWARMER BLACK

Black bodywarmer with red details, printed Suzuki logos on front and rear, very lightweight and warm, small packaging volume, outer material 100 % polyamide, inner lining 100 % polyamide, padding 100 % polyester.

Size XS/S/M/L/XL/XXL/3XL

990F0-BKBE2-000

TEAM BEANIE BLACK

Black team beanie with soft fleece lining, outer material 100 % acrylic, inner fleece lining 100 % polyester.

ONE SIZE FITS ALL

990F0-BKRJ2-size

TEAM RAIN JACKET BLACK WATERPROOF (RAINBREAKER)

Black lightweight waterproof rain jacket, small packaging, including pouch with straps integrated in reversible outer pocket, printed Suzuki logos front and rear, 100 % polyamide.

Size S/M/L/XL/XXL/3XL

990F0-BKSS2-size

TEAM SOFTSHELL JACKET BLACK

Black softshell jacket with red details, full-zip, 3 outer pockets, mesh lining, 96 % polyester, 4 % elastane.

Size XS/S/M/L/XL/XXL/3XL

990F0-MBAC1-000

BACKPACK

Day pack, functional addition to touring luggage, multiple functional pockets, bottle holder, waist and chest belts, compatible for drinking systems, eyelet fitted pocket for mp3 player and phone, 600D polyester.

Size H48cm/W25cm/D15cm/C24 litres

990F0-DRYBP-000

DRY BACKPACK

Waterproof backpack, anthracite/black, integrated padded laptop sleeve (up to 17" devices), additional outer pocket, environment-friendly TPU fabric, reflective material.

Size H66cm/W35cm/D14cm/C20 litres

990F0-DRYHB-002

DRY HIPBAG

Waterproof hipbag made of welded tarpaulin, reflective details, adjustable waist belt.

Size C2.5 litres

990F0-MTRL1-000

TROLLEY BY OGIO

Durable and easy to handle, with wide mouth for easy access, adjustable dividers and padded helmet chamber, multi-use compartments, 600D polyester. 30-years manufacturer's warranty.

Size H86cm/W42cm/D39cm/C180 litres

990F0-DRYDB-002

DRY BAG

Dry bag made of welded tarpaulin, reflective details, additional shoulder belt included.

Size H30cm/W30cm/D55cm/C35 litres

990F0-MMES1-000

LAPTOP BAG BY OGIO

Keeps your laptop safe with a plush lined notebook compartment. This Laptop bag has multiple pockets for extra storage. Comfortable strap and lightweight, to carry easily, nylon with water-resistant coating.

Size H29cm/W38cm/D5cm

990F0-MWAL1-000

WALLET

Black full-zip wallet with embroidered Suzuki logo on front. Nylon fabric with lining. Hook for key fixation and coin zipper pocket inside.

Size H15cm/W10.5cm/D2cm

990F0-MUMB2-000

UMBRELLA

Black with white Suzuki logo details, windproof with ergonomic EVA soft handle, comes in bag with shoulder strap, nylon with fiberglass spokes and metal shaft.

Size Diameter 130cm

990F0-MSUN2-000

SUNGLASSES

Stylish and lightweight, with 100 % UVA and B protection, made from acrylic with embossed Suzuki logo. Comes with EVA case and microfiber pouch.

990F0-MMUG1-000

MUG

Black and white design red Suzuki logo. Ceramic, suitable for microwave and dishwasher.

990F0-MWAT2-000

WATCH

Black stainless steel case. Date and time function, silicon strap, clock-face with carbon insets, mineral crystal watch glass, diameter 44mm, 5ATM water resistant. Comes with black gift box.

990F0-MKEY1-000

KEYRING BLACK

Black and white, PVC.

990F0-MLAN1-000

LANYARD

Black fabric strap detailed with Suzuki logo and metal key ring.

SUZUKI
PARTS & ACCESSORIES

KEEP it REAL!

DEALER NOTES

GET YOUR “SUZUKI COLLECTION” CATALOGUE NOW!

You want the perfect outfit for yourself and unique Suzuki merchandise? More you can find in the current Suzuki collection catalogue you can get from your Suzuki partner. Product may vary from image shown. Please check with your local Suzuki Dealer for any such changes. Please confirm the full specification of your chosen accessory prior to purchase and fitment. Actual colours may differ slightly from the colours in this brochure. All details are correct at time of going to press.

SUZUKI reserves the right to add any improvement to change the design or to discontinue any item at any time without notice. Some items might not be compatible with local standards or statutory requirements. Please check with your local AUTHORIZED SUZUKI DEALER for details at the time of ordering. Actual colors might differ from those appearing in this catalogue.

Suzuki accessories are designed specifically for Suzuki vehicles and are subject to the same quality standards as the vehicles themselves. We would like to draw your specific attention to the fact that only Suzuki original accessories are tested and approved by Suzuki. The requirements they have to meet are set out in the relevant manuals. Under certain circumstances, the installation and/or usage of other accessory parts may therefore have a negative impact on the characteristics of your vehicle as set out in the design specifications, thereby impairing ride safety. Suzuki cannot, under any circumstances, be made liable for damage occurring from the use of any accessory that is not a Suzuki original accessory.

Subject to engineering and design modifications without prior notice. Please consult the current price list for details of accessory prices.

The details given in this brochure are non-binding and are purely for informational purposes. Errors excepted.

Suzuki’s “Way of Life!” is the heart of our brand - every Suzuki vehicle, motorcycle and outboard motor is built to create excitement so customers can enjoy everyday life.

THE ULTIMATE 4-STROKE OUTBOARD

SUZUKI